DVT-2

N88 SINGLE_BRD_ESD(MLB) 3/23/2009 A, REV 5

PAGE	CONTENTS
02	RADIO AND AP SCHEMATIC INSTANTIATION

PART#	QTY	DESCRIPTION	REFERENCE DESIGNATOR(S)	CRITICAL	BOM OPTION
051-8004	1	N88_SCHEMATIC_TOP	SCH	Y	?
820-2580	1	N88_SINGLE_BOARD	PCB	Y	?
PROTO_RADIO	1	2G RF SOLUTION		Y	2G_RF
PROTO_RADIO	1	3G RF SOLUTION		Y	3G_RF
COMPASS	1	BOTTOM COMPASS LOCATION		Y	COMPASS_BOT
COMPASS	1	TOP COMPASS LOCATION		Y	COMPASS_TOP
JTAG	1	JTAG DEVELOPMENT BOM		Y	DEVELOPMENT
JTAG	1	JTAG PRODUCTION BOM		Y	PRODUCTION

BOARD - 820-2580
SCHEMATIC - 051-8004
MCO - 056-2731

BOM - 639-0065(16GB+MURATA)
BOM - 639-0066(16GB+MITSUMI)
BOM - 639-0067(32GB+MURATA)
BOM - 639-0068(32GB+MITSUMI)

512S0070 512S0060 ? J2_AP SIM CONNECTOR

NAND BOM OPTIONS

PART#	QTY	DESCRIPTION	REFERENCE DESIGNATOR(S)	CRITICAL	BOM OPTION
335S0643	1	8GB HYNIX 48NM FLASH	U1_AP	Y	FLASH_8GB
335S0642	1	16GB SAMSUNG 42NM FLASH	U1_AP	Y	FLASH_16GB
335S0650	1	32GB SAMSUNG 43NM FLASH	U1_AP	Y	FLASH_32GB

NAND ALTERNATES

PART NUMBER	ALTERNATE FOR PART NUMBER	BOM OPTION	REF DES	COMMENTS:
335S0637	335S0598	FLASH_8GB	U1_AP	8GB SAMSUNG 42NM FLASH
		?		

DEV FUSED BB BOM OPTION

PART#	QTY	DESCRIPTION	REFERENCE DESIGNATOR(S)	CRITICAL	BOM OPTION
998-2348	1	DEV FUSED BB	U22_RF	Y	DEV_FUSED_BB

N88 EEE BOM LABELS

PART#	QTY	DESCRIPTION	REFERENCE DESIGNATOR(S)	CRITICAL	BOM OPTION
825-2029	1	EEE FOR 639-0066 (16G)	EEE:8DL	Y	EEE_16GB_MURATA
825-2029	1	EEE FOR 639-0067 (16G)	EEE:8DM	Y	EEE_16GB_MITSUMI
825-2029	1	EEE FOR 639-0068 (32G)	EEE:8DN	Y	EEE_32GB_MURATA
825-2029	1	EEE FOR 639-0069 (32G)	EEE:8DP	Y	EEE_32GB_MITSUMI

SIM CONNECTOR ALTERNATE

PART NUMBER	ALTERNATE FOR PART NUMBER	BOM OPTION	REF DES	COMMENTS:
512S0069	512S0060	?	J2_AP	SIM CONNECTOR

WIFI/BT BOM OPTIONS

PART#	QTY	DESCRIPTION	REFERENCE DESIGNATOR(S)	CRITICAL	BOM OPTION
339S0072	1	MURATA WIFI/BT MODULE	U6_RF	Y	MURATA
339S0077	1	MITSUMI WIFI/BT MODULE	U6_RF	Y	MITSUMI
118S0012	1	MURATA ID RESISTOR	R61_RF	Y	MURATA
118S0012	1	MITSUMI ID RESISTOR	R6_RF	Y	MITSUMI

GPS TCXO BOM OPTIONS

PART#	QTY	DESCRIPTION	REFERENCE DESIGNATOR(S)	CRITICAL	BOM OPTION
197S0250	1	KDS TCXO	G3_RF	Y	KDS_GPS_TCXO
197S0274	1	EPSON TCXO	G3_RF	Y	EPSON_GPS_TCXO

VIDEO AMP ALTERNATE

PART NUMBER	ALTERNATE FOR PART NUMBER	BOM OPTION	REF DES	COMMENTS:
353S1625	353S1650	?	U14_AP	VIDEO AMP

DISPLAY DC-DC ALTERNATE

PART NUMBER	ALTERNATE FOR PART NUMBER	BOM OPTION	REF DES	COMMENTS:
353S1989	353S2529	?	U20_AP	LCM DC-DC

ZIF CONNECTOR ALTERNATE

PART NUMBER	ALTERNATE FOR PART NUMBER	BOM OPTION	REF DES	COMMENTS:
518S0611	518S0600	?	J7_AP	ALS ZIF CONN

26 MHZ ALTERNATE

PART NUMBER	ALTERNATE FOR PART NUMBER	BOM OPTION	REF DES	COMMENTS:
197S0255	197S0275	?	G2_RF	RF 26 MHZ CLK

BAND 2 PA

PART#	QTY	DESCRIPTION	REFERENCE DESIGNATOR(S)	CRITICAL	BOM OPTION
353S2363	1	BAND 2 PA, IFX	U37_RF	Y	IFX_BAW
353S2522	1	BAND 2 PA, TRIQUINT	U37_RF	Y	TQNT_BAW

RF DDR MEMORY

PART#	QTY	DESCRIPTION	REFERENCE DESIGNATOR(S)	CRITICAL	BOM OPTION
335S0617	1	SPANSION DDR	U1_RF	Y	RF_SPANSION
335S0652	1	NUMONYX DDR	U1_RF	Y	RF_NUMONYX
335S0632	1	SAMSUNG DDR	U1_RF	Y	RF_SAMSUNG
341S2474	1	ALL SUPPLIER SUB-BOM DDR	U1_RF	Y	RF_PROGRAMMED_BASEBAND_MEMORY

AP
I3

RF
I2

	20 9	BB_PMU_ON_N
	13 9	RADIO_ON
	13 6	BB_RST
	20 4	AP_PMU_EXTON
	21 9	VSIM
	26 9	VSD2
	13 6	BATTERY_SWI
	14 9	BB_USART0_CTS_N
	26 9	BB_USART0_RXD
	14 9	BB_USART0_RTS_N
	14 9	BB_USART0_TXD
CODEC	14 4	BB_I2S_CLK
	14 4	BB_I2S_TX
	14 4	BB_I2S_RX
	14 4	BB_I2S_WA0
	26 9	DOCK_TDI_MUX
AP_SUB_ESD	22 9	PWR_KEY_BB_N
	13 9	RESET_1V8_N
	13 4	RESET_DET_N
	13 9	BT_WAKE
WLAN	14 9	WLAN_RESET
	14 11	WLAN_SDIO_CLK
	14 11	WLAN_SDIO_CMD
	14 11	WLAN_SDIO_DATA<3..0>
SIM	21 9	SIMCRD_IO
	21 9	SIMCRD_CLK
	21 9	SIMCRD_RST
	21 4	SIM_DETECT
BLUETOOTH	14 11	BT_I2S_BCLK
	14 11	BT_I2S_DIN
	14 11	BT_I2S_LRCLK
	14 11	BT_I2S_DOUT
	14 9	BT_UART_RXD
	14 9	BT_UART_TXD
	14 9	BT_UART_RTS_N
	14 9	BT_UART_CTS_N
	13 9	BT_RESET
IPC	14 4	IPC_MOSI
	14 4	IPC_MISO
	14 4	IPC_SCLK
	14 4	IPC_SRDY
	14 4	IPC_MRDY
	14 4	BB_FLASH_ACTIVE
BATTERY	20 6	NTC
	20 6	BATSNS
	18 6	BATT_VCC_CURSNS
	14 9	AP_UART2_RXD
	26 4	UMTS_RXD
	13 4	AP_TEMP
	14 4	BB_I2S1_CLK
	14 4	BB_I2S1_RX
	14 4	BB_I2S1_WA0

RADIO_MLB

4 BB_I2S1_TX

N88 (ICE2.1) HSDPA RADIO
DVT - 03/02/09(A):BRD

PAGE	CONTENTS
02	BASEBAND
03	BASEBAND + MEMORY
04	BASEBAND PMU
05	GSM & UMTS TRANSCEIVER
06	POWER AMPS AND RF FRONT END
07	SYSTEM CONNECTORS
08	A-GPS
09	WLAN AND BLUETOOTH RADIO

BOARD - 920-0593
SCHEMATIC - 951-0716
BOM - 630-9356

PART#	QTY	DESCRIPTION	REFERENCE DESIGNATOR(S)	CRITICAL	BOM OPTION
951-0716	1	N82_RF_AND_AP_SCHEMATIC	SCH	Y	
920-0593	1	N82_RF_AND_AP_PCB	PCB	Y	
825-2029	1	EEE: Y5K(8GB), YEU(16GB)	EEE:Y5K	Y	

BASEBAND

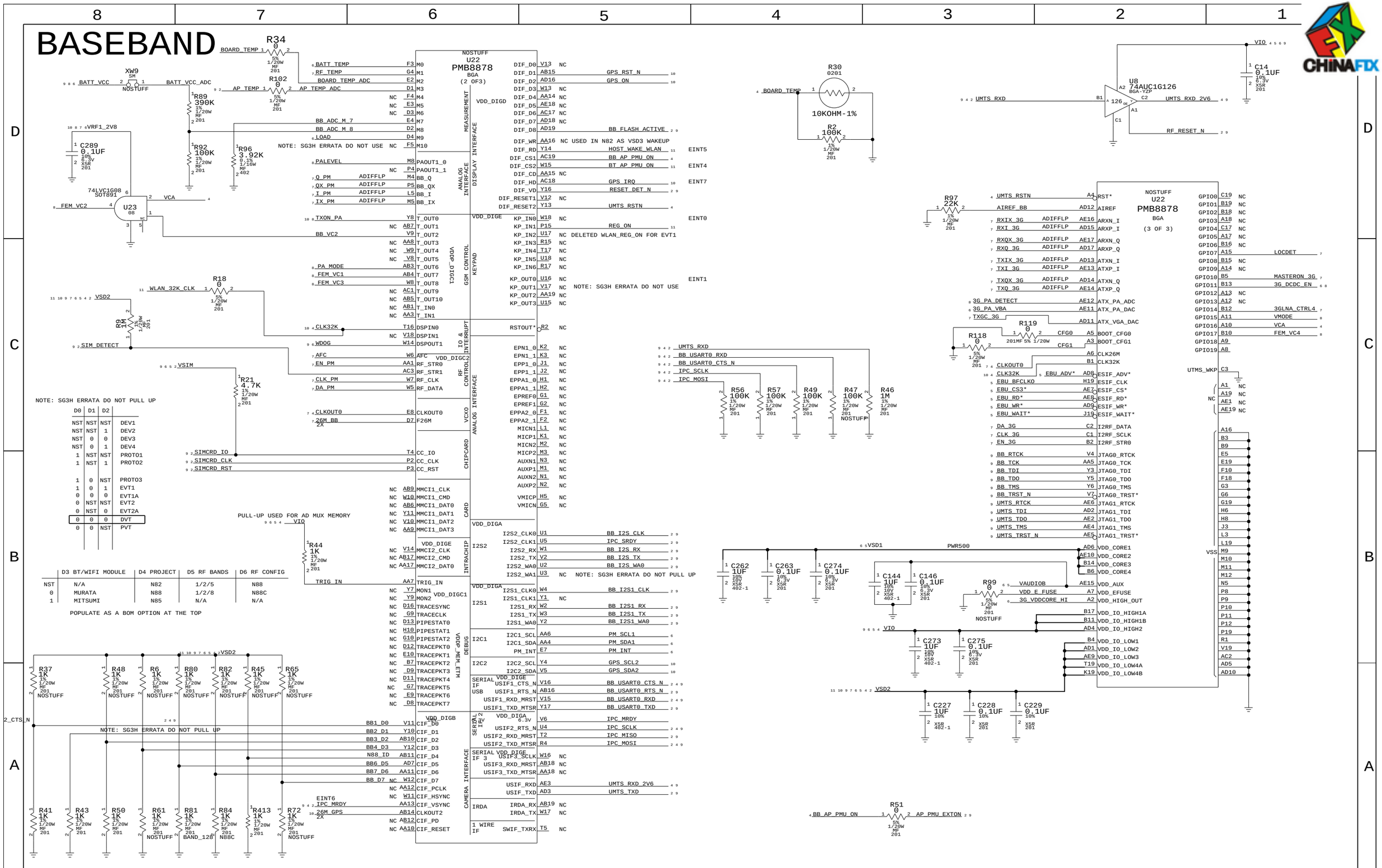
U22
PMB8878
BGA
(2 OF3)
(3 OF 3)
NOSTUFF
U8
74AUC1G126
BGA-YZP
U23
74LVC1G08
SOT891
R30
0201
10KOHM-1%
R2
100K
R34
0
R102
0
R89
390K
R92
100K
R96
3.92K
C289
0.1UF
XW9
SM
R18
0
R9
1M
R21
4.7K
R44
1K
R97
22K
R118
0
R119
0
R56
100K
R57
100K
R49
100K
R47
100K
R46
1M
C14
0.1UF
C262
1UF
C263
0.1UF
C274
0.1UF
C144
1UF
C146
0.1UF
R99
0
C273
1UF
C275
0.1UF
C227
1UF
C228
0.1UF
C229
0.1UF
R51
0
R37
1K
R48
1K
R6
1K
R80
1K
R82
1K
R45
1K
R65
1K
R41
1K
R43
1K
R50
1K
R61
1K
R81
1K
R84
1K
R413
1K
R72
1K
NOTE: SG3H ERRATA DO NOT USE
NOTE: SG3H ERRATA DO NOT PULL UP
NOTE: SG3H ERRATA DO NOT USE
NOTE: SG3H ERRATA DO NOT PULL UP
PULL-UP USED FOR AD MUX MEMORY
POPULATE AS A BOM OPTION AT THE TOP
BOARD_TEMP
UMTS_RXD
VIO
VSD1
VSD2
PWR500
VSS
BATT_VCC
BATT_VCC_ADC
AP_TEMP
AP_TEMP_ADC
BOARD_TEMP_ADC
BATT_TEMP
RF_TEMP
LOAD
PALEVEL
Q_PM
QX_PM
I_PM
IX_PM
TXON_PA
PA_MODE
FEM_VC1
FEM_VC3
WDOG
AFC
EN_PM
CLK_PM
DA_PM
CLKOUT0
26M_BB
2X
SIMCRD_IO
SIMCRD_CLK
SIMCRD_RST
MMCI1_CLK
MMCI1_CMD
MMCI1_DAT0
MMCI1_DAT1
MMCI1_DAT2
MMCI1_DAT3
MMCI2_CLK
MMCI2_CMD
MMCI2_DAT0
TRIG_IN
MON1
MON2
TRACESYNC
TRACECLK
PIPESTAT0
PIPESTAT1
PIPESTAT2
TRACEPKT0
TRACEPKT1
TRACEPKT2
TRACEPKT3
TRACEPKT4
TRACEPKT5
TRACEPKT6
TRACEPKT7
CIF_D0
CIF_D1
CIF_D2
CIF_D3
CIF_D4
CIF_D5
CIF_D6
CIF_D7
CIF_PCLK
CIF_HSYNC
CIF_VSYNC
CLKOUT2
CIF_PD
CIF_RESET
BB_ADC_M_7
BB_ADC_M_8
BB_VC2
WLAN_32K_CLK
VSD2
SIM_DETECT
VSIM
FEM_VC2
VCA
VRF1_2V8
EINT6
IPC_MRDY
26M_GPS
2X
BB_USART0_RXD
BB_USART0_CTS_N
IPC_SCLK
IPC_MOSI
BB_USART0_RTS_N
BB_USART0_RXD
BB_USART0_TXD
IPC_MRDY
IPC_SCLK
IPC_MISO
IPC_MOSI
UMTS_RXD_2V6
UMTS_TXD
BB_I2S_CLK
IPC_SRDY
BB_I2S_RX
BB_I2S_TX
BB_I2S_WA0
BB_I2S1_CLK
BB_I2S1_RX
BB_I2S1_TX
BB_I2S1_WA0
PM_SCL1
PM_SDA1
PM_INT
GPS_SCL2
GPS_SDA2
GPS_RST_N
GPS_ON
BB_FLASH_ACTIVE
HOST_WAKE_WLAN
BB_AP_PMU_ON
BT_AP_PMU_ON
GPS_IRQ
RESET_DET_N
UMTS_RSTN
REG_ON
NC USED IN N82 AS VSD3 WAKEUP
NC DELETED WLAN_REG_ON FOR EVT1
EINT5
EINT4
EINT7
EINT0
EINT1
UMTS_RSTN
AIREF_BB
RXIX_3G
RXI_3G
RXQX_3G
RXQ_3G
TXIX_3G
TXI_3G
TXQX_3G
TXQ_3G
3G_PA_DETECT
3G_PA_VBA
TXGC_3G
CLKOUT0
CLK32K
EBU_BFCLKO
EBU_CS3*
EBU_RD*
EBU_WR*
EBU_WAIT*
EBU_ADV*
DA_3G
CLK_3G
EN_3G
BB_RTCK
BB_TCK
BB_TDI
BB_TDO
BB_TMS
BB_TRST_N
UMTS_RTCK
UMTS_TDI
UMTS_TDO
UMTS_TMS
UMTS_TRST_N
VAUDIOB
VDD_E_FUSE
3G_VDDCORE_HI
LOCDET
MASTERON_3G
3G_DCDC_EN
3GLNA_CTRL4
VMODE
VCA
FEM_VC4
BB_AP_PMU_ON
AP_PMU_EXTON

BASEBAND/RADIO MEM

NOR/DDR MCP STACK

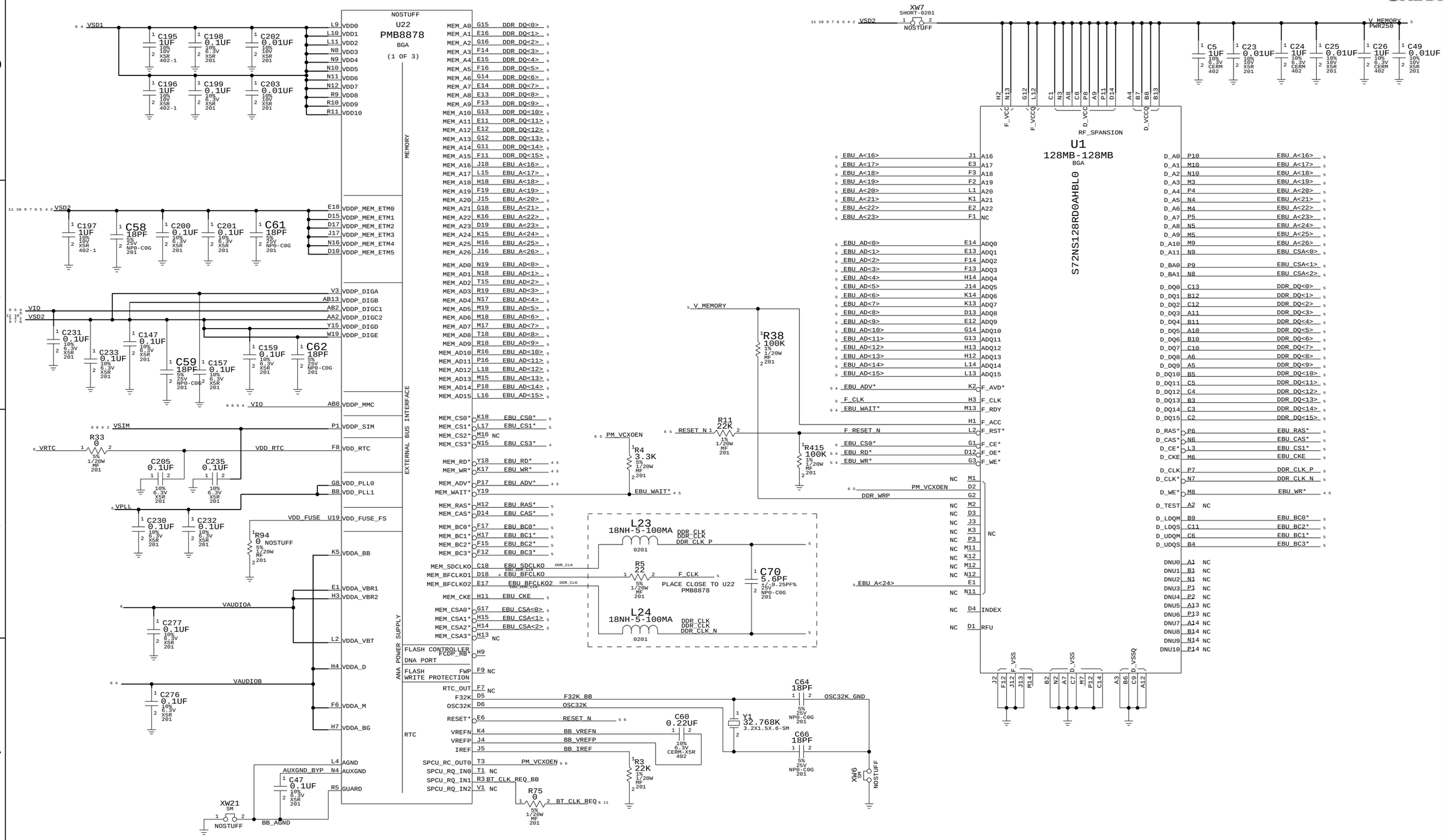

SM POWER 3I PMU

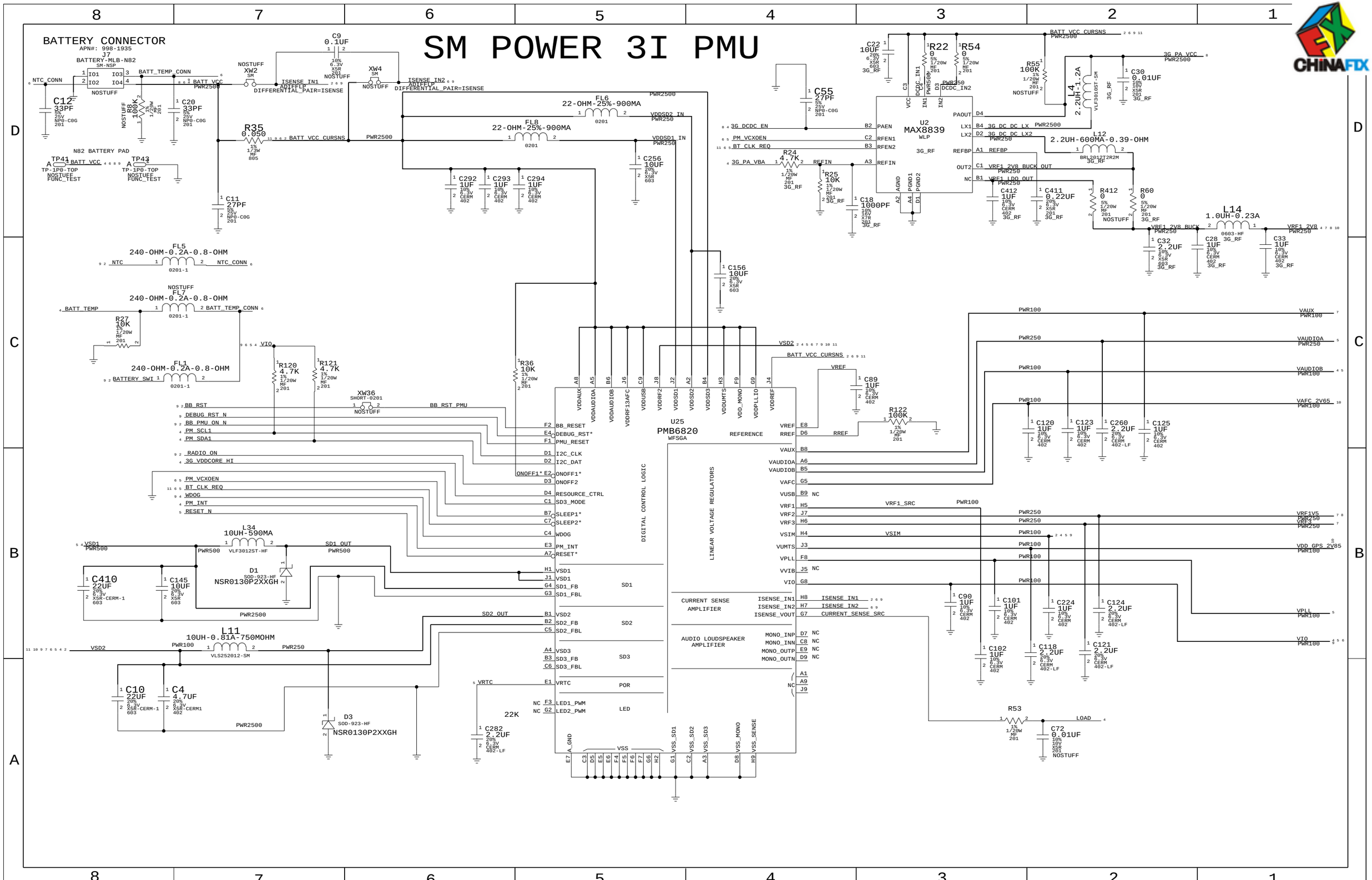

GSM & UMTS TRANSCEIVER - SMARTI 3GE

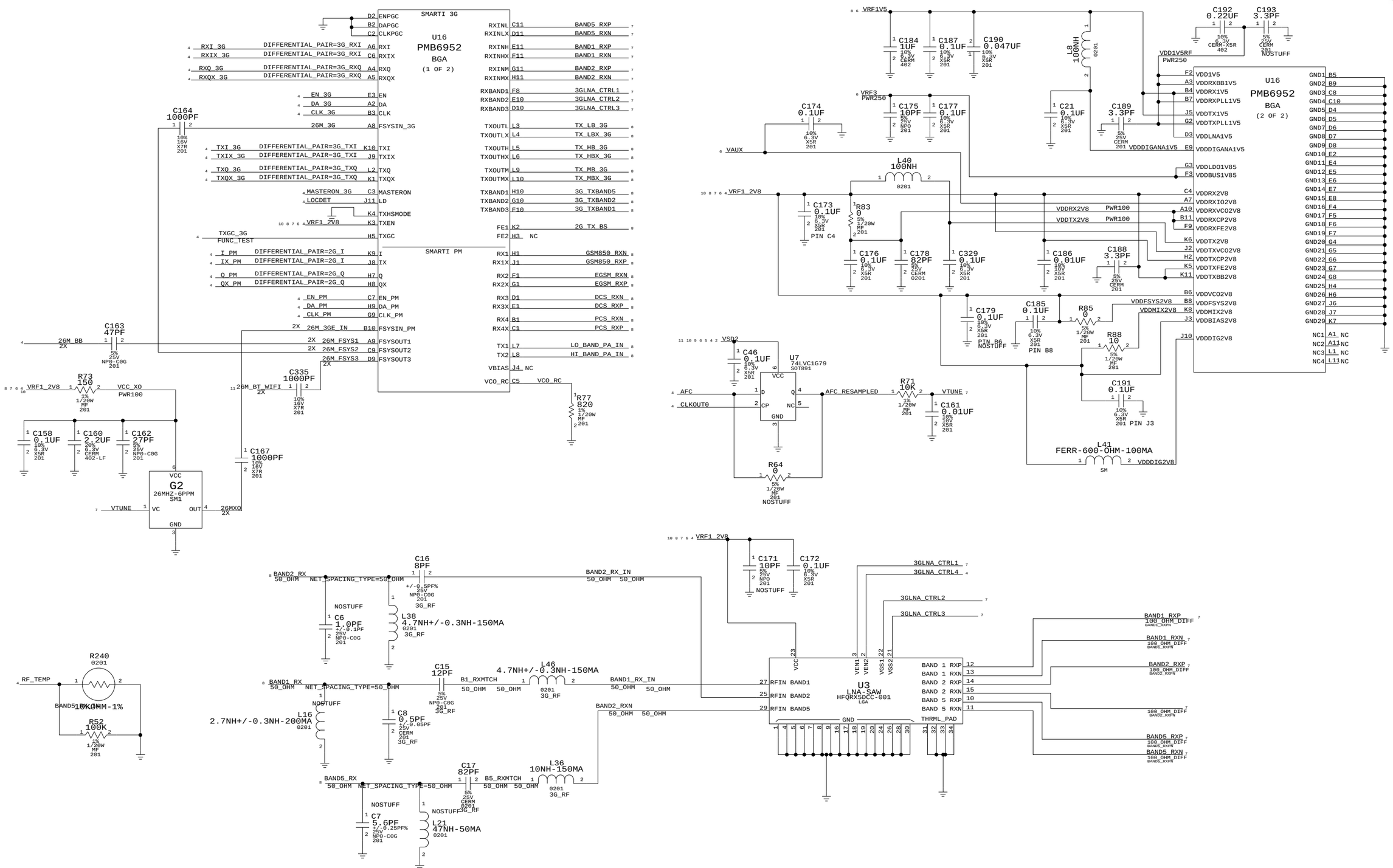

POWER AMPS AND RF FRONT-END MODULE

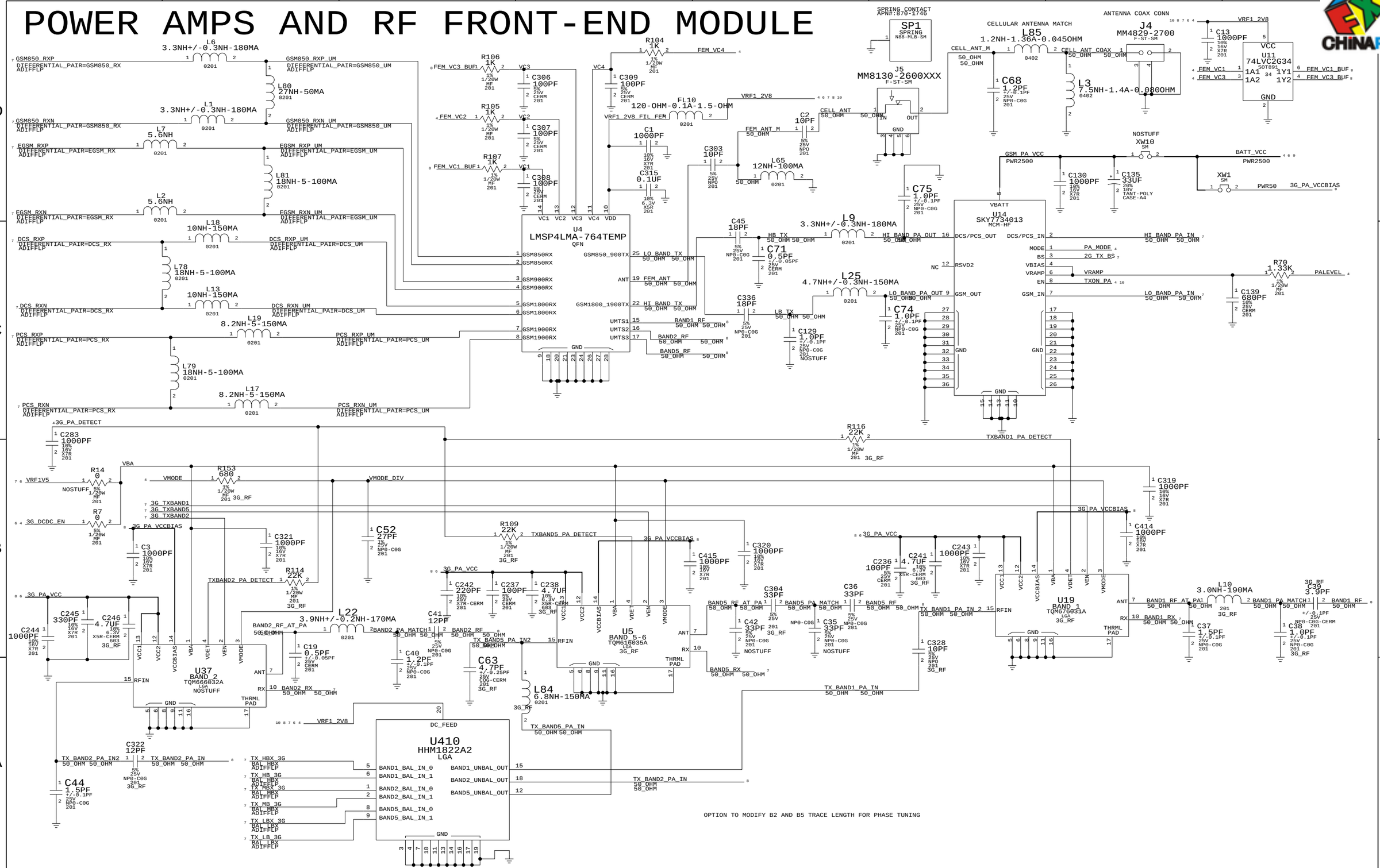

SYSTEM CONNECTORS

AP CONNECTIONS

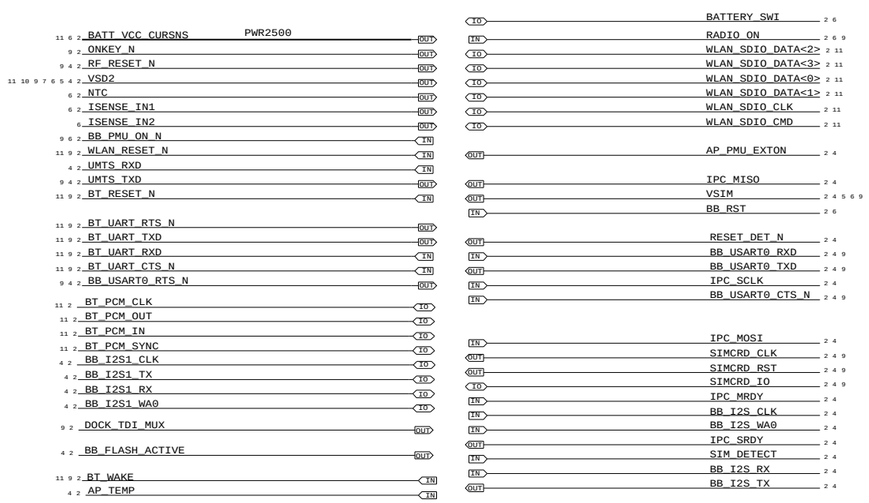

DEBUG CONNECTOR

516S0612

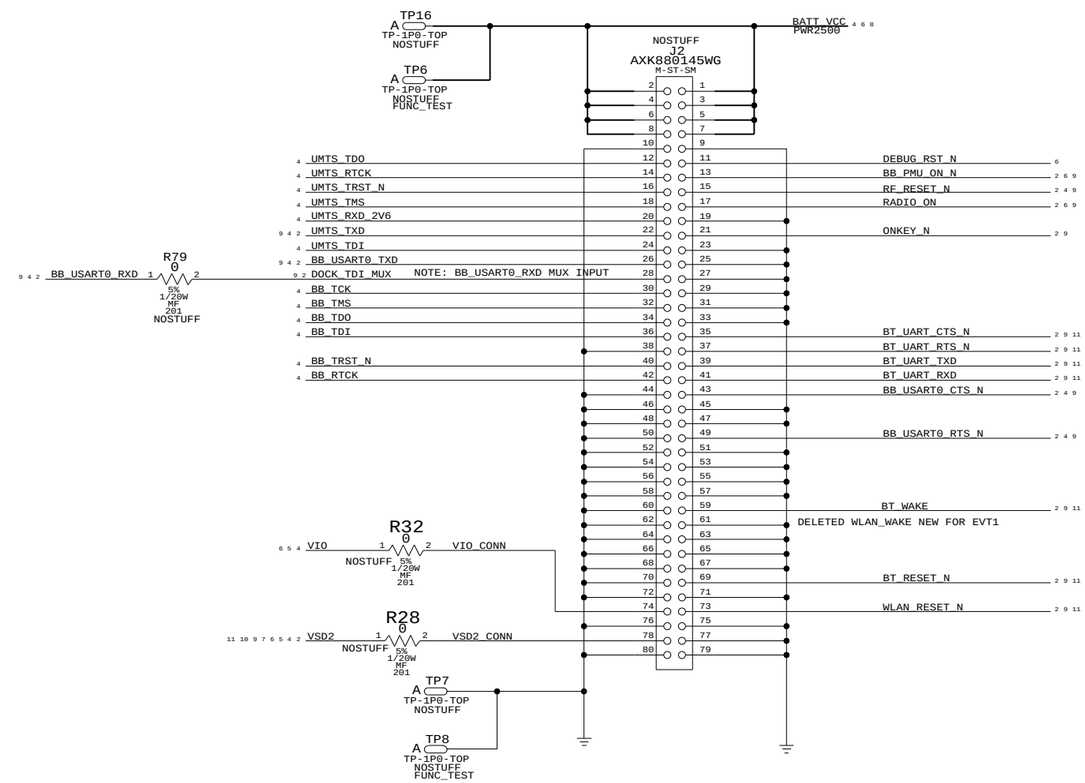

PLACE TEST POINT ON TOP SIDE

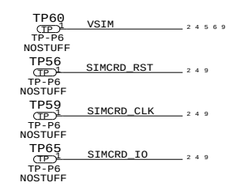

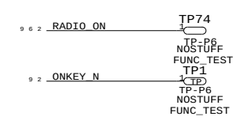

NOTE: FOR DEBUG FIXTURES WHEN UART MUXES ARE NOSTUFF

A-GPS

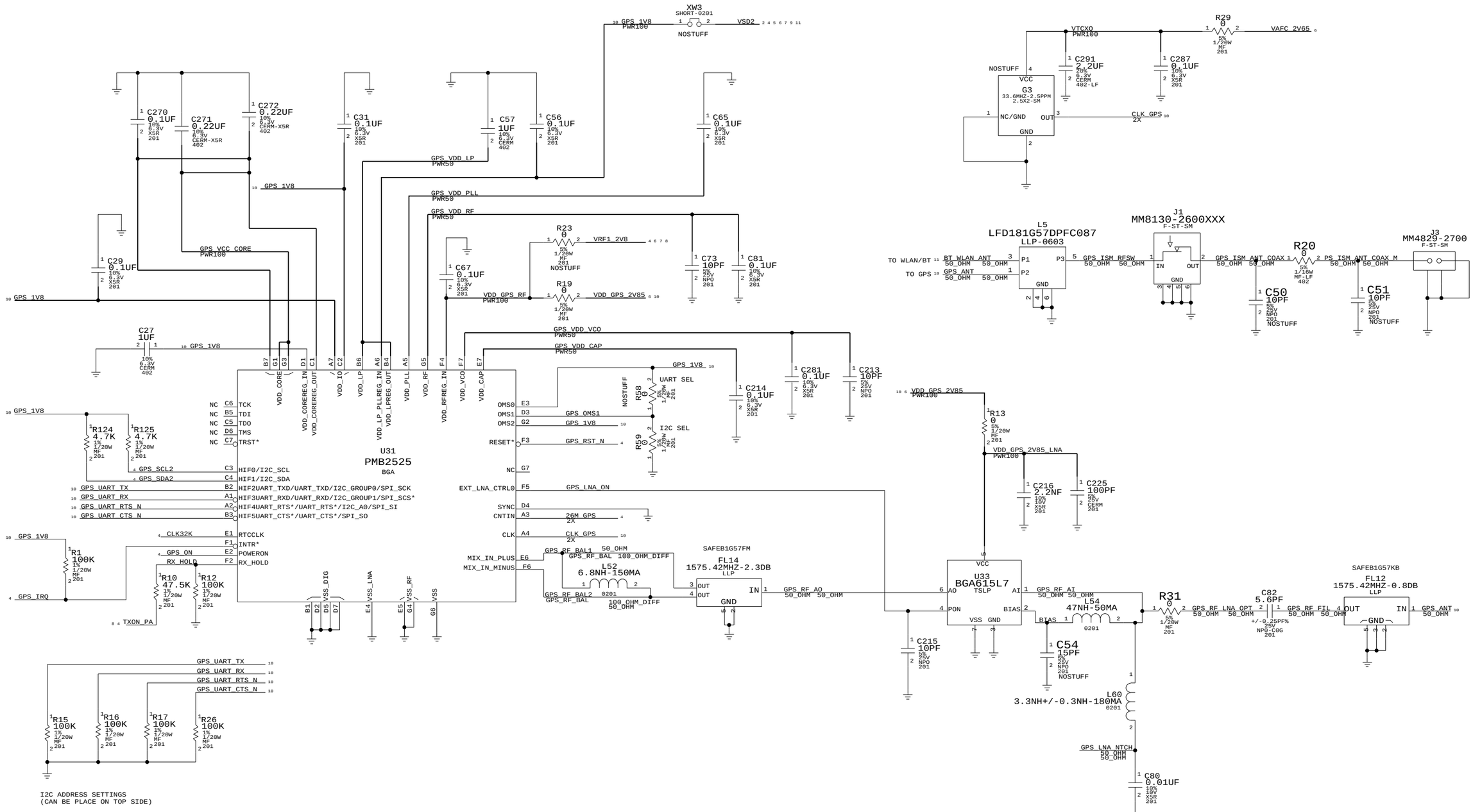
XW3
SHORT-0201
NOSTUFF
GPS_1V8
PWR100
VSD2
C270 0.1UF
C271 0.22UF
C272 0.22UF
C31 0.1UF
C57 1UF
C56 0.1UF
C65 0.1UF
GPS_VDD_LP
PWR50
GPS_VDD_PLL
GPS_VDD_RF
GPS_VCC_CORE
PWR100
C29 0.1UF
C67 0.1UF
R23 0
VRF1_2V8
R19 0
VDD_GPS_RF
VDD_GPS_2V85
C73 10PF
C81 0.1UF
C27 1UF
GPS_VDD_VCO
GPS_VDD_CAP
C214 0.1UF
C281 0.1UF
C213 10PF
R124 4.7K
R125 4.7K
U31
PMB2525
BGA
NC C6 TCK
NC B5 TDI
NC C5 TDO
NC D6 TMS
NC C7 TRST*
GPS_SCL2 C3 HIF0/I2C_SCL
GPS_SDA2 C4 HIF1/I2C_SDA
GPS_UART_TX B2 HIF2UART_TXD/UART_TXD/I2C_GROUP0/SPI_SCK
GPS_UART_RX A1 HIF3UART_RXD/UART_RXD/I2C_GROUP1/SPI_SCS*
GPS_UART_RTS_N A2 HIF4UART_RTS*/UART_RTS*/I2C_A0/SPI_SI
GPS_UART_CTS_N B3 HIF5UART_CTS*/UART_CTS*/SPI_SO
CLK32K E1 RTCCLK
GPS_ON F1 INTR*
RX_HOLD E2 POWERON
RX_HOLD F2 RX_HOLD
OMS0 E3
OMS1 D3 GPS_OMS1
OMS2 G2 GPS_1V8
RESET* F3 GPS_RST_N
NC G7
EXT_LNA_CTRL0 F5 GPS_LNA_ON
SYNC D4
CNTIN A3 26M_GPS 2X
CLK A4 CLK_GPS 2X
MIX_IN_PLUS E6
MIX_IN_MINUS F6
R58 0 UART SEL
R59 0 I2C SEL
R1 100K
R10 47.5K
R12 100K
TXON_PA
GPS_IRQ
GPS_RF_BAL1 50_OHM
GPS_RF_BAL 100_OHM_DIFF
L52 6.8NH-150MA
GPS_RF_BAL2 0201
100_OHM_DIFF 50_OHM
SAFEB1G57FM
FL14 1575.42MHZ-2.3DB
LLP
GPS_RF_AO 50_OHM 50_OHM
R13 0
VDD_GPS_2V85_LNA
C216 2.2NF
C225 100PF
C215 10PF
U33
BGA615L7
TSLP
GPS_RF_AI 50_OHM 50_OHM
L54 47NH-50MA
C54 15PF
NOSTUFF
R31 0
GPS_RF_LNA_OPT 50_OHM 50_OHM
C82 5.6PF
GPS_RF_FIL 50_OHM 50_OHM
SAFEB1G57KB
FL12 1575.42MHZ-0.8DB
GPS_ANT 50_OHM
L60 3.3NH+/-0.3NH-180MA
0201
GPS_LNA_NTCH 50_OHM 50_OHM
C80 0.01UF
R15 100K
R16 100K
R17 100K
R26 100K
GPS_UART_TX
GPS_UART_RX
GPS_UART_RTS_N
GPS_UART_CTS_N
I2C ADDRESS SETTINGS
(CAN BE PLACE ON TOP SIDE)
VTCXO
PWR100
R29 0
VAFC_2V65
C291 2.2UF
C287 0.1UF
G3
33.6MHZ-2.5PPM
2.5X2-SM
NC/GND
OUT
GND
CLK_GPS 2X
L5
LFD181G57DPFC087
LLP-0603
TO WLAN/BT
BT_WLAN_ANT 50_OHM 50_OHM
TO GPS
GPS_ANT 50_OHM 50_OHM
GPS_ISM_RFSW 50_OHM 50_OHM
J1
MM8130-2600XXX
F-ST-SM
GPS_ISM_ANT_COAX 50_OHM 50_OHM
R20 0
PS_ISM_ANT_COAX_M 50_OHM 50_OHM
C50 10PF
C51 10PF
J3
MM4829-2700
F-ST-SM

WLAN RADIO

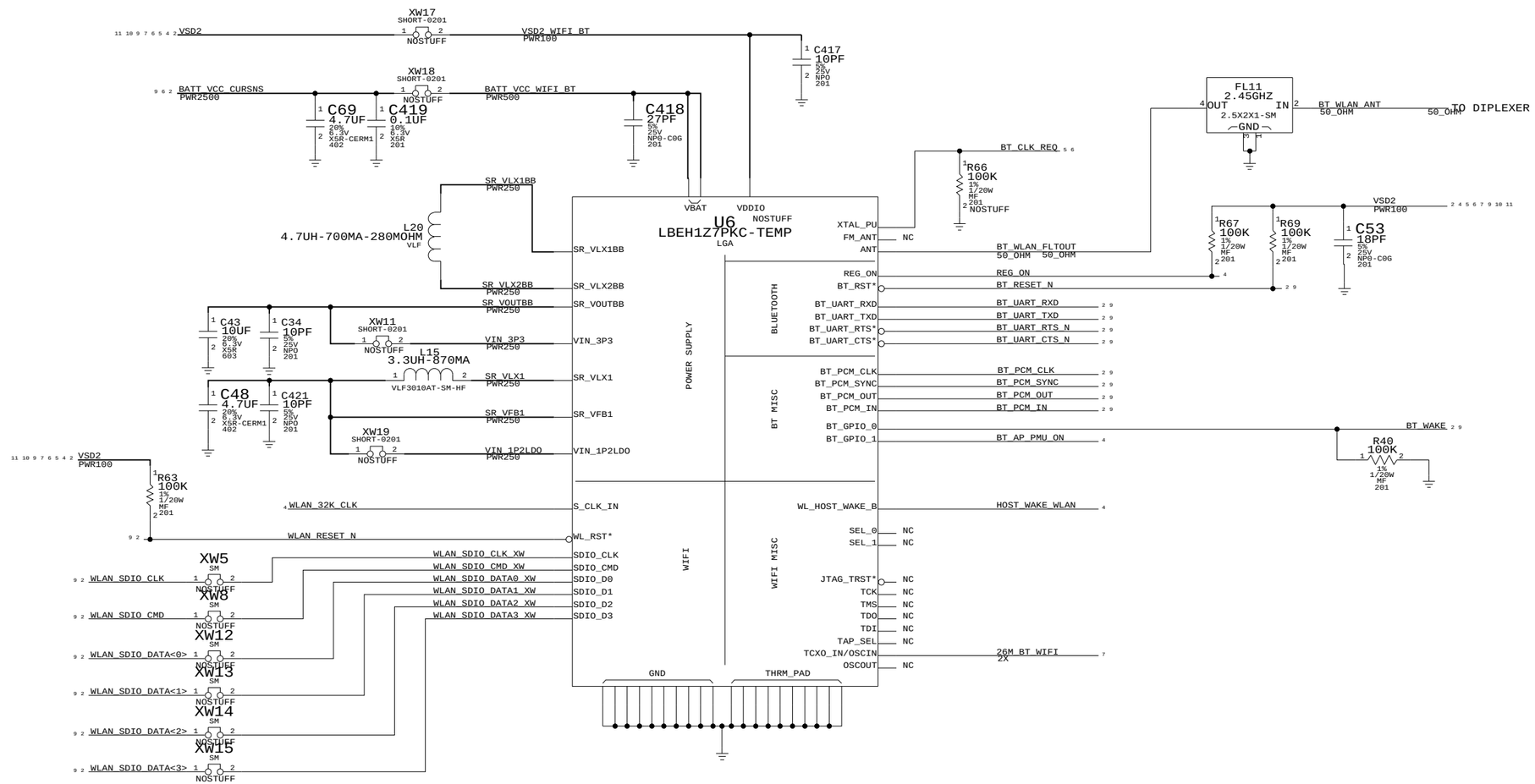
VSD2
XW17
SHORT-0201
NOSTUFF
VSD2_WIFI_BT
PWR100
C417
10PF
5%
25V
NPO
201
BATT_VCC_CURSNS
PWR2500
XW18
SHORT-0201
NOSTUFF
BATT_VCC_WIFI_BT
PWR500
C69
4.7UF
20%
6.3V
X5R-CERM1
402
C419
0.1UF
10%
6.3V
X5R
201
C418
27PF
5%
25V
NP0-C0G
201
FL11
2.45GHZ
OUT
IN
2.5X2X1-SM
GND
BT_WLAN_ANT
50_OHM
TO DIPLEXER
BT_CLK_REQ
R66
100K
1%
1/20W
MF
201
NOSTUFF
SR_VLX1BB
PWR250
L20
4.7UH-700MA-280MOHM
VLF
VBAT
VDDIO
NOSTUFF
U6
LBEH1Z7PKC-TEMP
LGA
XTAL_PU
FM_ANT
NC
ANT
BT_WLAN_FLTOUT
50_OHM
R67
100K
1%
1/20W
MF
201
R69
100K
1%
1/20W
MF
201
VSD2
PWR100
C53
18PF
5%
25V
NP0-C0G
201
SR_VLX1BB
SR_VLX2BB
PWR250
SR_VOUTBB
PWR250
REG_ON
BT_RST*
REG_ON
BT_RESET_N
BT_UART_RXD
BT_UART_TXD
BT_UART_RTS*
BT_UART_CTS*
BT_UART_RXD
BT_UART_TXD
BT_UART_RTS_N
BT_UART_CTS_N
BLUETOOTH
C43
10UF
20%
6.3V
X5R
603
C34
10PF
5%
25V
NPO
201
XW11
SHORT-0201
NOSTUFF
L15
3.3UH-870MA
VLF3010AT-SM-HF
VIN_3P3
PWR250
VIN_3P3
SR_VLX1
PWR250
SR_VLX1
C48
4.7UF
20%
6.3V
X5R-CERM1
402
C421
10PF
5%
25V
NPO
201
SR_VFB1
PWR250
SR_VFB1
XW19
SHORT-0201
NOSTUFF
VIN_1P2LDO
PWR250
VIN_1P2LDO
POWER SUPPLY
BT_PCM_CLK
BT_PCM_SYNC
BT_PCM_OUT
BT_PCM_IN
BT_PCM_CLK
BT_PCM_SYNC
BT_PCM_OUT
BT_PCM_IN
BT MISC
BT_GPIO_0
BT_GPIO_1
BT_AP_PMU_ON
BT_WAKE
R40
100K
1%
1/20W
MF
201
VSD2
PWR100
R63
100K
1%
1/20W
MF
201
WLAN_32K_CLK
S_CLK_IN
WL_HOST_WAKE_B
HOST_WAKE_WLAN
WLAN_RESET_N
WL_RST*
SEL_0
SEL_1
NC
NC
WLAN_SDIO_CLK_XW
WLAN_SDIO_CMD_XW
WLAN_SDIO_DATA0_XW
WLAN_SDIO_DATA1_XW
WLAN_SDIO_DATA2_XW
WLAN_SDIO_DATA3_XW
SDIO_CLK
SDIO_CMD
SDIO_D0
SDIO_D1
SDIO_D2
SDIO_D3
WIFI
WIFI MISC
XW5
SM
NOSTUFF
WLAN_SDIO_CLK
XW8
SM
NOSTUFF
WLAN_SDIO_CMD
XW12
SM
NOSTUFF
WLAN_SDIO_DATA<0>
XW13
SM
NOSTUFF
WLAN_SDIO_DATA<1>
XW14
SM
NOSTUFF
WLAN_SDIO_DATA<2>
XW15
SM
NOSTUFF
WLAN_SDIO_DATA<3>
JTAG_TRST*
TCK
TMS
TDO
TDI
TAP_SEL
TCXO_IN/OSCIN
OSCOUT
NC
26M_BT_WIFI
2X
GND
THRM_PAD

Title: Basenet Report
Design: radio_mlb
Date: Jan 29 18:20:30 2009

Base nets and synonyms for
radio_mlb_lib.RADIO_MLB(@radio_mlb_lib.radio_mlb(sch_1))

Base Signal	Synonyms	Location([Zone][dir])
2G_TX_BS	2G_TX_BS - @radio_mlb_lib.RADIO_MLB	5C5 6C2
3GLNA_CTRL1	3GLNA_CTRL1 - @radio_mlb_lib.RADIO_MLB	5B3 5D5
3GLNA_CTRL2	3GLNA_CTRL2 - @radio_mlb_lib.RADIO_MLB	5B3 5D5
3GLNA_CTRL3	3GLNA_CTRL3 - @radio_mlb_lib.RADIO_MLB	5B3 5D5
3GLNA_CTRL4	3GLNA_CTRL4 - @radio_mlb_lib.RADIO_MLB	2C1 5B3
3G_DCDC_EN	3G_DCDC_EN - @radio_mlb_lib.RADIO_MLB	2C1 4D4 6B8
3G_DC_DC_LX	3G_DC_DC_LX - @radio_mlb_lib.RADIO_MLB	4D3
3G_DC_DC_LX2	3G_DC_DC_LX2 - @radio_mlb_lib.RADIO_MLB	4D3
3G_PA_DETECT	3G_PA_DETECT - @radio_mlb_lib.RADIO_MLB	2C3 6C8
3G_PA_VBA	3G_PA_VBA - @radio_mlb_lib.RADIO_MLB	2C3 4D4
3G_PA_VCC	3G_PA_VCC - @radio_mlb_lib.RADIO_MLB	4D1 6B4 6B6 6B8
3G_PA_VCCBIAS	3G_PA_VCCBIAS - @radio_mlb_lib.RADIO_MLB	6B2 6B4 6B8 6D1
3G_TXBAND1	3G_TXBAND1 - @radio_mlb_lib.RADIO_MLB	5C5 6B8
3G_TXBAND2	3G_TXBAND2 - @radio_mlb_lib.RADIO_MLB	5C5 6B8
3G_TXBAND5	3G_TXBAND5 - @radio_mlb_lib.RADIO_MLB	5C5 6B8
3G_VDDCORE_HI	3G_VDDCORE_HI - @radio_mlb_lib.RADIO_MLB	2B3 4B7
26MXO	26MXO - @radio_mlb_lib.RADIO_MLB	5B7
26M_3G	26M_3G - @radio_mlb_lib.RADIO_MLB	5D7
26M_3GE_IN	26M_3GE_IN - @radio_mlb_lib.RADIO_MLB	5C7
26M_BB	26M_BB - @radio_mlb_lib.RADIO_MLB	2C7 5C8
26M_BT_WIFI	26M_BT_WIFI - @radio_mlb_lib.RADIO_MLB	5C7 9B3
26M_FSYS1	26M_FSYS1 - @radio_mlb_lib.RADIO_MLB	5C7
26M_FSYS2	26M_FSYS2 - @radio_mlb_lib.RADIO_MLB	5C7
26M_FSYS3	26M_FSYS3 - @radio_mlb_lib.RADIO_MLB	5C7
26M_GPS	26M_GPS - @radio_mlb_lib.RADIO_MLB	2A7 8B5
AFC	AFC - @radio_mlb_lib.RADIO_MLB	2C7 5C5
AFC_RESAMPLED	AFC_RESAMPLED - @radio_mlb_lib.RADIO_MLB	5C4
AIREF_BB	AIREF_BB - @radio_mlb_lib.RADIO_MLB	2D3
AP_PMU_EXTON	AP_PMU_EXTON - @radio_mlb_lib.RADIO_MLB	2A3 7C5
AP_TEMP	AP_TEMP - @radio_mlb_lib.RADIO_MLB	2D7 7B8
AP_TEMP_ADC	AP_TEMP_ADC - @radio_mlb_lib.RADIO_MLB	2D7
AUXGND_BYP	AUXGND_BYP - @radio_mlb_lib.RADIO_MLB	3A7
B1_RXMTCH	B1_RXMTCH - @radio_mlb_lib.RADIO_MLB	5A6
B5_RXMTCH	B5_RXMTCH - @radio_mlb_lib.RADIO_MLB	5A6
BAND1_PA_MATCH	BAND1_PA_MATCH - @radio_mlb_lib.RADIO_MLB	6B1
BAND1_RF	BAND1_RF - @radio_mlb_lib.RADIO_MLB	6B1 6C4
BAND1_RF_AT_PA	BAND1_RF_AT_PA - @radio_mlb_lib.RADIO_MLB	6B2
BAND1_RX	BAND1_RX - @radio_mlb_lib.RADIO_MLB	5A7 6B2
BAND1_RXN	BAND1_RXN - @radio_mlb_lib.RADIO_MLB	5B2 5D5
BAND1_RXP	BAND1_RXP - @radio_mlb_lib.RADIO_MLB	5B2 5D5
BAND1_RX_IN	BAND1_RX_IN - @radio_mlb_lib.RADIO_MLB	5A5
BAND2_PA_MATCH	BAND2_PA_MATCH - @radio_mlb_lib.RADIO_MLB	6B6
BAND2_RF	BAND2_RF - @radio_mlb_lib.RADIO_MLB	6B6 6C4
BAND2_RF_AT_PA	BAND2_RF_AT_PA - @radio_mlb_lib.RADIO_MLB	6B7
BAND2_RX	BAND2_RX - @radio_mlb_lib.RADIO_MLB	5B7 6A7
BAND2_RXN	BAND2_RXN - @radio_mlb_lib.RADIO_MLB	5A2 5D5
BAND2_RXP	BAND2_RXP - @radio_mlb_lib.RADIO_MLB	5A2 5D5
BAND2_RX_IN	BAND2_RX_IN - @radio_mlb_lib.RADIO_MLB	5B5
BAND5_PA_MATCH	BAND5_PA_MATCH - @radio_mlb_lib.RADIO_MLB	6B4
BAND5_RF	BAND5_RF - @radio_mlb_lib.RADIO_MLB	6B3 6C4
BAND5_RF_AT_PA	BAND5_RF_AT_PA - @radio_mlb_lib.RADIO_MLB	6B4
BAND5_RX	BAND5_RX - @radio_mlb_lib.RADIO_MLB	5A7 6A4
BAND5_RXN	BAND5_RXN - @radio_mlb_lib.RADIO_MLB	5A2 5D5
BAND5_RXP	BAND5_RXP - @radio_mlb_lib.RADIO_MLB	5A2 5D5
BAND5_RX_IN	BAND5_RX_IN - @radio_mlb_lib.RADIO_MLB	5A5
BATTERY_SWI	BATTERY_SWI - @radio_mlb_lib.RADIO_MLB	4C8 7C5
BATT_TEMP	BATT_TEMP - @radio_mlb_lib.RADIO_MLB	2D7 4C8
BATT_TEMP_CONN	BATT_TEMP_CONN - @radio_mlb_lib.RADIO_MLB	4C7 4D7
BATT_VCC	BATT_VCC - @radio_mlb_lib.RADIO_MLB	2D8 4D7 4D8 6D1 7D2
BATT_VCC_ADC	BATT_VCC_ADC - @radio_mlb_lib.RADIO_MLB	2D8
BATT_VCC_CURSNS	BATT_VCC_CURSNS - @radio_mlb_lib.RADIO_MLB	4C4 4D2 4D7 7C8 9D7
BATT_VCC_WIFI_BT	BATT_VCC_WIFI_BT - @radio_mlb_lib.RADIO_MLB	9D6
BB1_D0	BB1_D0 - @radio_mlb_lib.RADIO_MLB	2A6
BB2_D1	BB2_D1 - @radio_mlb_lib.RADIO_MLB	2A6
BB3_D2	BB3_D2 - @radio_mlb_lib.RADIO_MLB	2A6
BB4_D3	BB4_D3 - @radio_mlb_lib.RADIO_MLB	2A6
BB6_D5	BB6_D5 - @radio_mlb_lib.RADIO_MLB	2A6
BB7_D6	BB7_D6 - @radio_mlb_lib.RADIO_MLB	2A6
BB_ADC_M_7	BB_ADC_M_7 - @radio_mlb_lib.RADIO_MLB	2D7
BB_ADC_M_8	BB_ADC_M_8 - @radio_mlb_lib.RADIO_MLB	2D7
BB_AGND	BB_AGND - @radio_mlb_lib.RADIO_MLB	3A7
BB_AP_PMU_ON	BB_AP_PMU_ON - @radio_mlb_lib.RADIO_MLB	2A4 2D5
BB_D7	BB_D7 - @radio_mlb_lib.RADIO_MLB	2A6
BB_FLASH_ACTIVE	BB_FLASH_ACTIVE - @radio_mlb_lib.RADIO_MLB	2D5 7B8
BB_I2S1_CLK	BB_I2S1_CLK - @radio_mlb_lib.RADIO_MLB	2B5 7C8
BB_I2S1_RX	BB_I2S1_RX - @radio_mlb_lib.RADIO_MLB	2B5 7C8
BB_I2S1_TX	BB_I2S1_TX - @radio_mlb_lib.RADIO_MLB	2B5 7C8
BB_I2S1_WA0	BB_I2S1_WA0 - @radio_mlb_lib.RADIO_MLB	2B5 7B8
BB_I2S_CLK	BB_I2S_CLK - @radio_mlb_lib.RADIO_MLB	2B5 7B5
BB_I2S_RX	BB_I2S_RX - @radio_mlb_lib.RADIO_MLB	2B5 7B5
BB_I2S_TX	BB_I2S_TX - @radio_mlb_lib.RADIO_MLB	2B5 7B5
BB_I2S_WA0	BB_I2S_WA0 - @radio_mlb_lib.RADIO_MLB	2B5 7B5
BB_IREF	BB_IREF - @radio_mlb_lib.RADIO_MLB	3A5
BB_PMU_ON_N	BB_PMU_ON_N - @radio_mlb_lib.RADIO_MLB	4C7 7C1 7C8
BB_RST	BB_RST - @radio_mlb_lib.RADIO_MLB	4C7 7C5
BB_RST_PMU	BB_RST_PMU - @radio_mlb_lib.RADIO_MLB	4C6
BB_RTCK	BB_RTCK - @radio_mlb_lib.RADIO_MLB	2B3 7C4
BB_TCK	BB_TCK - @radio_mlb_lib.RADIO_MLB	2B3 7C4
BB_TDI	BB_TDI - @radio_mlb_lib.RADIO_MLB	2B3 7C4
BB_TDO	BB_TDO - @radio_mlb_lib.RADIO_MLB	2B3 7C4
BB_TMS	BB_TMS - @radio_mlb_lib.RADIO_MLB	2B3 7C4
BB_TRST_N	BB_TRST_N - @radio_mlb_lib.RADIO_MLB	2B3 7C4
BB_USART0_CTS_N	BB_USART0_CTS_N - @radio_mlb_lib.RADIO_MLB	2A5 2C5 7C1 7C5
BB_USART0_RTS_N	BB_USART0_RTS_N - @radio_mlb_lib.RADIO_MLB	2A5 7B1 7C8
BB_USART0_RXD	BB_USART0_RXD - @radio_mlb_lib.RADIO_MLB	2A5 2C5 7C5 7C5
BB_USART0_TXD	BB_USART0_TXD - @radio_mlb_lib.RADIO_MLB	2A5 7C4 7C5
BB_VC2	BB_VC2 - @radio_mlb_lib.RADIO_MLB	2D7
BB_VREFN	BB_VREFN - @radio_mlb_lib.RADIO_MLB	3A5
BB_VREFP	BB_VREFP - @radio_mlb_lib.RADIO_MLB	3A5
BIAS	BIAS - @radio_mlb_lib.RADIO_MLB	8B3
BOARD_TEMP	BOARD_TEMP - @radio_mlb_lib.RADIO_MLB	2D4 2D7
BOARD_TEMP_ADC	BOARD_TEMP_ADC - @radio_mlb_lib.RADIO_MLB	2D7
BT_AP_PMU_ON	BT_AP_PMU_ON - @radio_mlb_lib.RADIO_MLB	2D5 9C3
BT_CLK_REQ	BT_CLK_REQ - @radio_mlb_lib.RADIO_MLB	3A5 4B7 4D4 9C3
BT_CLK_REQ_BB	BT_CLK_REQ_BB - @radio_mlb_lib.RADIO_MLB	3A6
BT_PCM_CLK	BT_PCM_CLK - @radio_mlb_lib.RADIO_MLB	7C8 9C3
BT_PCM_IN	BT_PCM_IN - @radio_mlb_lib.RADIO_MLB	7C8 9C3
BT_PCM_OUT	BT_PCM_OUT - @radio_mlb_lib.RADIO_MLB	7C8 9C3
BT_PCM_SYNC	BT_PCM_SYNC - @radio_mlb_lib.RADIO_MLB	7C8 9C3
BT_RESET_N	BT_RESET_N - @radio_mlb_lib.RADIO_MLB	7B1 7C8 9C2
BT_UART_CTS_N	BT_UART_CTS_N - @radio_mlb_lib.RADIO_MLB	7C1 7C8 9C3
BT_UART_RTS_N	BT_UART_RTS_N - @radio_mlb_lib.RADIO_MLB	7C1 7C8 9C3
BT_UART_RXD	BT_UART_RXD - @radio_mlb_lib.RADIO_MLB	7C1 7C8 9C3
BT_UART_TXD	BT_UART_TXD - @radio_mlb_lib.RADIO_MLB	7C1 7C8 9C3
BT_WAKE	BT_WAKE - @radio_mlb_lib.RADIO_MLB	7B1 7B8 9C2
BT_WLAN_ANT	BT_WLAN_ANT - @radio_mlb_lib.RADIO_MLB	8C3 9D2
BT_WLAN_FLTOUT	BT_WLAN_FLTOUT - @radio_mlb_lib.RADIO_MLB	9C4
CELL_ANT	CELL_ANT - @radio_mlb_lib.RADIO_MLB	6D4
CELL_ANT_COAX	CELL_ANT_COAX - @radio_mlb_lib.RADIO_MLB	6D2
CELL_ANT_M	CELL_ANT_M - @radio_mlb_lib.RADIO_MLB	6D3
CFG0	CFG0 - @radio_mlb_lib.RADIO_MLB	2C2
CFG1	CFG1 - @radio_mlb_lib.RADIO_MLB	2C2
CLK32K	CLK32K - @radio_mlb_lib.RADIO_MLB	2C3 2C7 8B7
CLKOUT0	CLKOUT0 - @radio_mlb_lib.RADIO_MLB	2C3 2C7 5C5
CLK_3G	CLK_3G - @radio_mlb_lib.RADIO_MLB	2C3 5D7
CLK_GPS	CLK_GPS - @radio_mlb_lib.RADIO_MLB	8B5 8D2
CLK_PM	CLK_PM - @radio_mlb_lib.RADIO_MLB	2C7 5C7
CURRENT_SENSE_SRC	CURRENT_SENSE_SRC - @radio_mlb_lib.RADIO_MLB	4B4
DA_3G	DA_3G - @radio_mlb_lib.RADIO_MLB	2C3 5D7
DA_PM	DA_PM - @radio_mlb_lib.RADIO_MLB	2C7 5C7
DCDC_IN1	DCDC_IN1 - @radio_mlb_lib.RADIO_MLB	4D3
DCDC_IN2	DCDC_IN2 - @radio_mlb_lib.RADIO_MLB	4D3
DCS_RXN	DCS_RXN - @radio_mlb_lib.RADIO_MLB	5C5 6C8
DCS_RXN_UM	DCS_RXN_UM - @radio_mlb_lib.RADIO_MLB	6C7
DCS_RXP	DCS_RXP - @radio_mlb_lib.RADIO_MLB	5C5 6C8
DCS_RXP_UM	DCS_RXP_UM - @radio_mlb_lib.RADIO_MLB	6C7
DDR_CLK_N	DDR_CLK_N - @radio_mlb_lib.RADIO_MLB	3B1 3B4
DDR_CLK_P	DDR_CLK_P - @radio_mlb_lib.RADIO_MLB	3B1 3B4
DDR_DQ<0>	DDR_DQ<0> - @radio_mlb_lib.RADIO_MLB	3C1 3D5
DDR_DQ<1>	DDR_DQ<1> - @radio_mlb_lib.RADIO_MLB	3C1 3D5
DDR_DQ<2>	DDR_DQ<2> - @radio_mlb_lib.RADIO_MLB	3C1 3D5
DDR_DQ<3>	DDR_DQ<3> - @radio_mlb_lib.RADIO_MLB	3C1 3D5
DDR_DQ<4>	DDR_DQ<4> - @radio_mlb_lib.RADIO_MLB	3C1 3D5
DDR_DQ<5>	DDR_DQ<5> - @radio_mlb_lib.RADIO_MLB	3C1 3D5
DDR_DQ<6>	DDR_DQ<6> - @radio_mlb_lib.RADIO_MLB	3C1 3D5
DDR_DQ<7>	DDR_DQ<7> - @radio_mlb_lib.RADIO_MLB	3C1 3D5
DDR_DQ<8>	DDR_DQ<8> - @radio_mlb_lib.RADIO_MLB	3C1 3D5
DDR_DQ<9>	DDR_DQ<9> - @radio_mlb_lib.RADIO_MLB	3C1 3D5
DDR_DQ<10>	DDR_DQ<10> - @radio_mlb_lib.RADIO_MLB	3C1 3D5
DDR_DQ<11>	DDR_DQ<11> - @radio_mlb_lib.RADIO_MLB	3C1 3D5
DDR_DQ<12>	DDR_DQ<12> - @radio_mlb_lib.RADIO_MLB	3C1 3D5
DDR_DQ<13>	DDR_DQ<13> - @radio_mlb_lib.RADIO_MLB	3C1 3D5
DDR_DQ<14>	DDR_DQ<14> - @radio_mlb_lib.RADIO_MLB	3B1 3D5
DDR_DQ<15>	DDR_DQ<15> - @radio_mlb_lib.RADIO_MLB	3B1 3D5
DDR_WRP	DDR_WRP - @radio_mlb_lib.RADIO_MLB	3B4
DEBUG_RST_N	DEBUG_RST_N - @radio_mlb_lib.RADIO_MLB	4C7 7C1
DOCK_TDI_MUX	DOCK_TDI_MUX - @radio_mlb_lib.RADIO_MLB	7B6 7B8 7C4
EBU_A<16>	EBU_A<16> - @radio_mlb_lib.RADIO_MLB	3D1 3D4 3D5
EBU_A<17>	EBU_A<17> - @radio_mlb_lib.RADIO_MLB	3D1 3D4 3D5
EBU_A<18>	EBU_A<18> - @radio_mlb_lib.RADIO_MLB	3C5 3D1 3D4
EBU_A<19>	EBU_A<19> - @radio_mlb_lib.RADIO_MLB	3C1 3C4 3C5
EBU_A<20>	EBU_A<20> - @radio_mlb_lib.RADIO_MLB	3C1 3C4 3C5
EBU_A<21>	EBU_A<21> - @radio_mlb_lib.RADIO_MLB	3C1 3C4 3C5
EBU_A<22>	EBU_A<22> - @radio_mlb_lib.RADIO_MLB	3C1 3C4 3C5
EBU_A<23>	EBU_A<23> - @radio_mlb_lib.RADIO_MLB	3C1 3C4 3C5
EBU_A<24>	EBU_A<24> - @radio_mlb_lib.RADIO_MLB	3B4 3C1 3C5
EBU_A<25>	EBU_A<25> - @radio_mlb_lib.RADIO_MLB	3C1 3C5
EBU_A<26>	EBU_A<26> - @radio_mlb_lib.RADIO_MLB	3C1 3C5
EBU_AD<0>	EBU_AD<0> - @radio_mlb_lib.RADIO_MLB	3C4 3C5
EBU_AD<1>	EBU_AD<1> - @radio_mlb_lib.RADIO_MLB	3C4 3C5
EBU_AD<2>	EBU_AD<2> - @radio_mlb_lib.RADIO_MLB	3C4 3C5
EBU_AD<3>	EBU_AD<3> - @radio_mlb_lib.RADIO_MLB	3C4 3C5
EBU_AD<4>	EBU_AD<4> - @radio_mlb_lib.RADIO_MLB	3C4 3C5
EBU_AD<5>	EBU_AD<5> - @radio_mlb_lib.RADIO_MLB	3C4 3C5
EBU_AD<6>	EBU_AD<6> - @radio_mlb_lib.RADIO_MLB	3C4 3C5
EBU_AD<7>	EBU_AD<7> - @radio_mlb_lib.RADIO_MLB	3C4 3C5
EBU_AD<8>	EBU_AD<8> - @radio_mlb_lib.RADIO_MLB	3C4 3C5
EBU_AD<9>	EBU_AD<9> - @radio_mlb_lib.RADIO_MLB	3C4 3C5
EBU_AD<10>	EBU_AD<10> - @radio_mlb_lib.RADIO_MLB	3C4 3C5
EBU_AD<11>	EBU_AD<11> - @radio_mlb_lib.RADIO_MLB	3C4 3C5
EBU_AD<12>	EBU_AD<12> - @radio_mlb_lib.RADIO_MLB	3C4 3C5
EBU_AD<13>	EBU_AD<13> - @radio_mlb_lib.RADIO_MLB	3C4 3C5
EBU_AD<14>	EBU_AD<14> - @radio_mlb_lib.RADIO_MLB	3C4 3C5
EBU_AD<15>	EBU_AD<15> - @radio_mlb_lib.RADIO_MLB	3C4 3C5
EBU_ADV*	EBU_ADV* - @radio_mlb_lib.RADIO_MLB	2C2 3B5 3C4
EBU_BC0*	EBU_BC0* - @radio_mlb_lib.RADIO_MLB	3B1 3B5
EBU_BC1*	EBU_BC1* - @radio_mlb_lib.RADIO_MLB	3B1 3B5
EBU_BC2*	EBU_BC2* - @radio_mlb_lib.RADIO_MLB	3B1 3B5
EBU_BC3*	EBU_BC3* - @radio_mlb_lib.RADIO_MLB	3B1 3B5
EBU_BFCLKO	EBU_BFCLKO - @radio_mlb_lib.RADIO_MLB	2C3 3B6
EBU_BFCLKO2	EBU_BFCLKO2 - @radio_mlb_lib.RADIO_MLB	3B6
EBU_CAS*	EBU_CAS* - @radio_mlb_lib.RADIO_MLB	3B1 3B5
EBU_CKE	EBU_CKE - @radio_mlb_lib.RADIO_MLB	3B1 3B5
EBU_CS0*	EBU_CS0* - @radio_mlb_lib.RADIO_MLB	3B4 3B5
EBU_CS1*	EBU_CS1* - @radio_mlb_lib.RADIO_MLB	3B1 3B5
EBU_CS3*	EBU_CS3* - @radio_mlb_lib.RADIO_MLB	2C3 3B5
EBU_CSA<0>	EBU_CSA<0> - @radio_mlb_lib.RADIO_MLB	3B5 3C1
EBU_CSA<1>	EBU_CSA<1> - @radio_mlb_lib.RADIO_MLB	3B5 3C1
EBU_CSA<2>	EBU_CSA<2> - @radio_mlb_lib.RADIO_MLB	3B5 3C1
EBU_RAS*	EBU_RAS* - @radio_mlb_lib.RADIO_MLB	3B1 3B5
EBU_RD*	EBU_RD* - @radio_mlb_lib.RADIO_MLB	2C3 3B4 3B5
EBU_SDCLKO	EBU_SDCLKO - @radio_mlb_lib.RADIO_MLB	3B6
EBU_WAIT*	EBU_WAIT* - @radio_mlb_lib.RADIO_MLB	2C3 3B4 3B5
EBU_WR*	EBU_WR* - @radio_mlb_lib.RADIO_MLB	2C3 3B1 3B4 3B5
EGSM_RXN	EGSM_RXN - @radio_mlb_lib.RADIO_MLB	5C5 6D8
EGSM_RXN_UM	EGSM_RXN_UM - @radio_mlb_lib.RADIO_MLB	6D7
EGSM_RXP	EGSM_RXP - @radio_mlb_lib.RADIO_MLB	5C5 6D8
EGSM_RXP_UM	EGSM_RXP_UM - @radio_mlb_lib.RADIO_MLB	6D7
EN_3G	EN_3G - @radio_mlb_lib.RADIO_MLB	2C3 5D7
EN_PM	EN_PM - @radio_mlb_lib.RADIO_MLB	2C7 5C7
F32K_BB	F32K_BB - @radio_mlb_lib.RADIO_MLB	3A5
FEM_ANT	FEM_ANT - @radio_mlb_lib.RADIO_MLB	6C5
FEM_ANT_M	FEM_ANT_M - @radio_mlb_lib.RADIO_MLB	6D4
FEM_VC1	FEM_VC1 - @radio_mlb_lib.RADIO_MLB	2C7 6D2
FEM_VC1_BUF	FEM_VC1_BUF - @radio_mlb_lib.RADIO_MLB	6D1 6D6
FEM_VC2	FEM_VC2 - @radio_mlb_lib.RADIO_MLB	2D8 6D6
FEM_VC3	FEM_VC3 - @radio_mlb_lib.RADIO_MLB	2C7 6D2
FEM_VC3_BUF	FEM_VC3_BUF - @radio_mlb_lib.RADIO_MLB	6D1 6D6
FEM_VC4	FEM_VC4 - @radio_mlb_lib.RADIO_MLB	2C1 6D4
F_CLK	F_CLK - @radio_mlb_lib.RADIO_MLB	3B5 3C4
F_RESET_N	F_RESET_N - @radio_mlb_lib.RADIO_MLB	3B4
GPS_1V8	GPS_1V8 - @radio_mlb_lib.RADIO_MLB	8B5 8B8 8C5 8C7 8C7 8C8 8C8 8D5
GPS_ANT	GPS_ANT - @radio_mlb_lib.RADIO_MLB	8B1 8C3
GPS_IRQ	GPS_IRQ - @radio_mlb_lib.RADIO_MLB	2D5 8B8
GPS_ISM_ANT_COAX	GPS_ISM_ANT_COAX - @radio_mlb_lib.RADIO_MLB	8C2
GPS_ISM_RFSW	GPS_ISM_RFSW - @radio_mlb_lib.RADIO_MLB	8C3
GPS_LNA_NTCH	GPS_LNA_NTCH - @radio_mlb_lib.RADIO_MLB	8A3
GPS_LNA_ON	GPS_LNA_ON - @radio_mlb_lib.RADIO_MLB	8B5
GPS_OMS1	GPS_OMS1 - @radio_mlb_lib.RADIO_MLB	8C5
GPS_ON	GPS_ON - @radio_mlb_lib.RADIO_MLB	2D5 8B7
GPS_RF_AI	GPS_RF_AI - @radio_mlb_lib.RADIO_MLB	8B3
GPS_RF_AO	GPS_RF_AO - @radio_mlb_lib.RADIO_MLB	8B4
GPS_RF_BAL1	GPS_RF_BAL1 - @radio_mlb_lib.RADIO_MLB	8B5
GPS_RF_BAL2	GPS_RF_BAL2 - @radio_mlb_lib.RADIO_MLB	8B5
GPS_RF_FIL	GPS_RF_FIL - @radio_mlb_lib.RADIO_MLB	8B2
GPS_RF_LNA_OPT	GPS_RF_LNA_OPT - @radio_mlb_lib.RADIO_MLB	8B2
GPS_RST_N	GPS_RST_N - @radio_mlb_lib.RADIO_MLB	2D5 8B5
GPS_SCL2	GPS_SCL2 - @radio_mlb_lib.RADIO_MLB	2A5 8B8
GPS_SDA2	GPS_SDA2 - @radio_mlb_lib.RADIO_MLB	2A5 8B8
GPS_UART_CTS_N	GPS_UART_CTS_N - @radio_mlb_lib.RADIO_MLB	8A7 8B8
GPS_UART_RTS_N	GPS_UART_RTS_N - @radio_mlb_lib.RADIO_MLB	8A7 8B8
GPS_UART_RX	GPS_UART_RX - @radio_mlb_lib.RADIO_MLB	8A7 8B8
GPS_UART_TX	GPS_UART_TX - @radio_mlb_lib.RADIO_MLB	8B7 8B8
GPS_VCC_CORE	GPS_VCC_CORE - @radio_mlb_lib.RADIO_MLB	8C7
GPS_VDD_CAP	GPS_VDD_CAP - @radio_mlb_lib.RADIO_MLB	8C5
GPS_VDD_LP	GPS_VDD_LP - @radio_mlb_lib.RADIO_MLB	8D6
GPS_VDD_PLL	GPS_VDD_PLL - @radio_mlb_lib.RADIO_MLB	8C6
GPS_VDD_RF	GPS_VDD_RF - @radio_mlb_lib.RADIO_MLB	8C6
GPS_VDD_VCO	GPS_VDD_VCO - @radio_mlb_lib.RADIO_MLB	8C5
GSM850_RXN	GSM850_RXN - @radio_mlb_lib.RADIO_MLB	5C5 6D8
GSM850_RXN_UM	GSM850_RXN_UM - @radio_mlb_lib.RADIO_MLB	6D7
GSM850_RXP	GSM850_RXP - @radio_mlb_lib.RADIO_MLB	5C5 6D8
GSM850_RXP_UM	GSM850_RXP_UM - @radio_mlb_lib.RADIO_MLB	6D7
GSM_PA_VCC	GSM_PA_VCC - @radio_mlb_lib.RADIO_MLB	6D3
HB_TX	HB_TX - @radio_mlb_lib.RADIO_MLB	6C4
HI_BAND_PA_IN	HI_BAND_PA_IN - @radio_mlb_lib.RADIO_MLB	5C5 6C2
HI_BAND_PA_OUT	HI_BAND_PA_OUT - @radio_mlb_lib.RADIO_MLB	6C3
HI_BAND_TX	HI_BAND_TX - @radio_mlb_lib.RADIO_MLB	6C5
HOST_WAKE_WLAN	HOST_WAKE_WLAN - @radio_mlb_lib.RADIO_MLB	2D5 9B3
IPC_MISO	IPC_MISO - @radio_mlb_lib.RADIO_MLB	2A5 7C5
IPC_MOSI	IPC_MOSI - @radio_mlb_lib.RADIO_MLB	2A5 2C5 7C5
IPC_MRDY	IPC_MRDY - @radio_mlb_lib.RADIO_MLB	2A5 2A7 7B5
IPC_SCLK	IPC_SCLK - @radio_mlb_lib.RADIO_MLB	2A5 2C5 7C5
IPC_SRDY	IPC_SRDY - @radio_mlb_lib.RADIO_MLB	2B5 7B5
ISENSE_IN1	ISENSE_IN1 - @radio_mlb_lib.RADIO_MLB	4B3 4D7 7C8
ISENSE_IN2	ISENSE_IN2 - @radio_mlb_lib.RADIO_MLB	4B3 4D6 7C8
IX_PM	IX_PM - @radio_mlb_lib.RADIO_MLB	2D7 5C7
I_PM	I_PM - @radio_mlb_lib.RADIO_MLB	2D7 5C7
LB_TX	LB_TX - @radio_mlb_lib.RADIO_MLB	6C4
LOAD	LOAD - @radio_mlb_lib.RADIO_MLB	2D7 4A2
LOCDET	LOCDET - @radio_mlb_lib.RADIO_MLB	2C1 5C7
LO_BAND_PA_IN	LO_BAND_PA_IN - @radio_mlb_lib.RADIO_MLB	5C5 6C2
LO_BAND_PA_OUT	LO_BAND_PA_OUT - @radio_mlb_lib.RADIO_MLB	6C3
LO_BAND_TX	LO_BAND_TX - @radio_mlb_lib.RADIO_MLB	6C5
MASTERON_3G	MASTERON_3G - @radio_mlb_lib.RADIO_MLB	2C1 5C7
N88_ID	N88_ID - @radio_mlb_lib.RADIO_MLB	2A6
NTC	NTC - @radio_mlb_lib.RADIO_MLB	4C8 7C8
NTC_CONN	NTC_CONN - @radio_mlb_lib.RADIO_MLB	4C7 4D8
ONKEY_N	ONKEY_N - @radio_mlb_lib.RADIO_MLB	7A3 7C1 7C8
ONOFF1*	ONOFF1* - @radio_mlb_lib.RADIO_MLB	4B5
OSC32K	OSC32K - @radio_mlb_lib.RADIO_MLB	3A5
OSC32K_GND	OSC32K_GND - @radio_mlb_lib.RADIO_MLB	3A4
PALEVEL	PALEVEL - @radio_mlb_lib.RADIO_MLB	2D7 6C1
PCS_RXN	PCS_RXN - @radio_mlb_lib.RADIO_MLB	5C5 6C8
PCS_RXN_UM	PCS_RXN_UM - @radio_mlb_lib.RADIO_MLB	6C7
PCS_RXP	PCS_RXP - @radio_mlb_lib.RADIO_MLB	5C5 6C8
PCS_RXP_UM	PCS_RXP_UM - @radio_mlb_lib.RADIO_MLB	6C7
PM_INT	PM_INT - @radio_mlb_lib.RADIO_MLB	2B5 4B7
PM_SCL1	PM_SCL1 - @radio_mlb_lib.RADIO_MLB	2B5 4C7
PM_SDA1	PM_SDA1 - @radio_mlb_lib.RADIO_MLB	2B5 4C7
PM_VCXOEN	PM_VCXOEN - @radio_mlb_lib.RADIO_MLB	3A5 3B4 3B5 4B7 4D4
PS_ISM_ANT_COAX_M	PS_ISM_ANT_COAX_M - @radio_mlb_lib.RADIO_MLB	8C1
QX_PM	QX_PM - @radio_mlb_lib.RADIO_MLB	2D7 5C7
Q_PM	Q_PM - @radio_mlb_lib.RADIO_MLB	2D7 5C7
RADIO_ON	RADIO_ON - @radio_mlb_lib.RADIO_MLB	4B7 7A3 7C1 7C5
REFBP	REFBP - @radio_mlb_lib.RADIO_MLB	4D3
REFIN	REFIN - @radio_mlb_lib.RADIO_MLB	4D4
REG_ON	REG_ON - @radio_mlb_lib.RADIO_MLB	2D5 9C3

RESET_DET_N	RESET_DET_N - @radio_mlb_lib.RADIO_MLB	2D5 7C5
RESET_N	RESET_N - @radio_mlb_lib.RADIO_MLB	3A5 3B5 4B7
RF_RESET_N	RF_RESET_N - @radio_mlb_lib.RADIO_MLB	2D1 7C1 7C8
RF_TEMP	RF_TEMP - @radio_mlb_lib.RADIO_MLB	2D7 5A8
RREF	RREF - @radio_mlb_lib.RADIO_MLB	4C4
RXIX_3G	RXIX_3G - @radio_mlb_lib.RADIO_MLB	2D3 5D7
RXI_3G	RXI_3G - @radio_mlb_lib.RADIO_MLB	2D3 5D7
RXQX_3G	RXQX_3G - @radio_mlb_lib.RADIO_MLB	2C3 5D7
RXQ_3G	RXQ_3G - @radio_mlb_lib.RADIO_MLB	2C3 5D7
RX_HOLD	RX_HOLD - @radio_mlb_lib.RADIO_MLB	8B7
SD1_OUT	SD1_OUT - @radio_mlb_lib.RADIO_MLB	4B7
SD2_OUT	SD2_OUT - @radio_mlb_lib.RADIO_MLB	4B6
SIMCRD_CLK	SIMCRD_CLK - @radio_mlb_lib.RADIO_MLB	2B7 7A5 7C5
SIMCRD_IO	SIMCRD_IO - @radio_mlb_lib.RADIO_MLB	2B7 7A5 7C5
SIMCRD_RST	SIMCRD_RST - @radio_mlb_lib.RADIO_MLB	2B7 7A5 7C5
SIM_DETECT	SIM_DETECT - @radio_mlb_lib.RADIO_MLB	2C8 7A5 7B5
SR_VFB1	SR_VFB1 - @radio_mlb_lib.RADIO_MLB	9C5
SR_VLX1	SR_VLX1 - @radio_mlb_lib.RADIO_MLB	9C6
SR_VLX1BB	SR_VLX1BB - @radio_mlb_lib.RADIO_MLB	9C6
SR_VLX2BB	SR_VLX2BB - @radio_mlb_lib.RADIO_MLB	9C6
SR_VOUTBB	SR_VOUTBB - @radio_mlb_lib.RADIO_MLB	9C6
TRIG_IN	TRIG_IN - @radio_mlb_lib.RADIO_MLB	2B7
TXBAND1_PA_DETECT	TXBAND1_PA_DETECT - @radio_mlb_lib.RADIO_MLB	6C3
TXBAND2_PA_DETECT	TXBAND2_PA_DETECT - @radio_mlb_lib.RADIO_MLB	6B7
TXBAND5_PA_DETECT	TXBAND5_PA_DETECT - @radio_mlb_lib.RADIO_MLB	6B5
TXGC_3G	TXGC_3G - @radio_mlb_lib.RADIO_MLB	2C3 5C7
TXIX_3G	TXIX_3G - @radio_mlb_lib.RADIO_MLB	2C3 5D7
TXI_3G	TXI_3G - @radio_mlb_lib.RADIO_MLB	2C3 5D7
TXON_PA	TXON_PA - @radio_mlb_lib.RADIO_MLB	2D7 6C2 8B8
TXQX_3G	TXQX_3G - @radio_mlb_lib.RADIO_MLB	2C3 5C7
TXQ_3G	TXQ_3G - @radio_mlb_lib.RADIO_MLB	2C3 5D7
TX_BAND1_PA_IN	TX_BAND1_PA_IN - @radio_mlb_lib.RADIO_MLB	6A4
TX_BAND1_PA_IN_2	TX_BAND1_PA_IN_2 - @radio_mlb_lib.RADIO_MLB	6B3
TX_BAND2_PA_IN	TX_BAND2_PA_IN - @radio_mlb_lib.RADIO_MLB	6A4 6A7
TX_BAND2_PA_IN2	TX_BAND2_PA_IN2 - @radio_mlb_lib.RADIO_MLB	6A8
TX_BAND5_PA_IN	TX_BAND5_PA_IN - @radio_mlb_lib.RADIO_MLB	6A5
TX_BAND5_PA_IN2	TX_BAND5_PA_IN2 - @radio_mlb_lib.RADIO_MLB	6B6
TX_HBX_3G	TX_HBX_3G - @radio_mlb_lib.RADIO_MLB	5D5 6A7
TX_HB_3G	TX_HB_3G - @radio_mlb_lib.RADIO_MLB	5D5 6A7
TX_LBX_3G	TX_LBX_3G - @radio_mlb_lib.RADIO_MLB	5D5 6A7
TX_LB_3G	TX_LB_3G - @radio_mlb_lib.RADIO_MLB	5D5 6A7
TX_MBX_3G	TX_MBX_3G - @radio_mlb_lib.RADIO_MLB	5C5 6A7
TX_MB_3G	TX_MB_3G - @radio_mlb_lib.RADIO_MLB	5D5 6A7
UMTS_RSTN	UMTS_RSTN - @radio_mlb_lib.RADIO_MLB	2D3 2D5
UMTS_RTCK	UMTS_RTCK - @radio_mlb_lib.RADIO_MLB	2B3 7C4
UMTS_RXD	UMTS_RXD - @radio_mlb_lib.RADIO_MLB	2C5 2D3 7C8
UMTS_RXD_2V6	UMTS_RXD_2V6 - @radio_mlb_lib.RADIO_MLB	2A5 2D1 7C4
UMTS_TDI	UMTS_TDI - @radio_mlb_lib.RADIO_MLB	2B3 7C4
UMTS_TDO	UMTS_TDO - @radio_mlb_lib.RADIO_MLB	2B3 7C4
UMTS_TMS	UMTS_TMS - @radio_mlb_lib.RADIO_MLB	2B3 7C4
UMTS_TRST_N	UMTS_TRST_N - @radio_mlb_lib.RADIO_MLB	2B3 7C4
UMTS_TXD	UMTS_TXD - @radio_mlb_lib.RADIO_MLB	2A5 7C4 7C8
VAFC_2V65	VAFC_2V65 - @radio_mlb_lib.RADIO_MLB	4C1 8D2
VAUDIOA	VAUDIOA - @radio_mlb_lib.RADIO_MLB	3B8 4C1
VAUDIOB	VAUDIOB - @radio_mlb_lib.RADIO_MLB	2B3 3A8 4C1
VAUX	VAUX - @radio_mlb_lib.RADIO_MLB	4C1 5D4
VBA	VBA - @radio_mlb_lib.RADIO_MLB	6B8
VC1	VC1 - @radio_mlb_lib.RADIO_MLB	6D5
VC2	VC2 - @radio_mlb_lib.RADIO_MLB	6D5
VC3	VC3 - @radio_mlb_lib.RADIO_MLB	6D5
VC4	VC4 - @radio_mlb_lib.RADIO_MLB	6D5
VCA	VCA - @radio_mlb_lib.RADIO_MLB	2C1 2D7
VCC_XO	VCC_XO - @radio_mlb_lib.RADIO_MLB	5C8
VCO_RC	VCO_RC - @radio_mlb_lib.RADIO_MLB	5C5
VDD1V5RF	VDD1V5RF - @radio_mlb_lib.RADIO_MLB	5D2
VDDDIG2V8	VDDDIG2V8 - @radio_mlb_lib.RADIO_MLB	5B2
VDDDIGANA1V5	VDDDIGANA1V5 - @radio_mlb_lib.RADIO_MLB	5D2
VDDFSYS2V8	VDDFSYS2V8 - @radio_mlb_lib.RADIO_MLB	5C2
VDDMIX2V8	VDDMIX2V8 - @radio_mlb_lib.RADIO_MLB	5C2
VDDRX2V8	VDDRX2V8 - @radio_mlb_lib.RADIO_MLB	5C3
VDDSD1_IN	VDDSD1_IN - @radio_mlb_lib.RADIO_MLB	4D5
VDDSD2_IN	VDDSD2_IN - @radio_mlb_lib.RADIO_MLB	4D5
VDDTX2V8	VDDTX2V8 - @radio_mlb_lib.RADIO_MLB	5C3
VDD_E_FUSE	VDD_E_FUSE - @radio_mlb_lib.RADIO_MLB	2B3
VDD_FUSE	VDD_FUSE - @radio_mlb_lib.RADIO_MLB	3B7
VDD_GPS_2V85	VDD_GPS_2V85 - @radio_mlb_lib.RADIO_MLB	4B1 8C4 8C5
VDD_GPS_2V85_LNA	VDD_GPS_2V85_LNA - @radio_mlb_lib.RADIO_MLB	8B3
VDD_GPS_RF	VDD_GPS_RF - @radio_mlb_lib.RADIO_MLB	8C6
VDD_RTC	VDD_RTC - @radio_mlb_lib.RADIO_MLB	3B7
VIN_1P2LDO	VIN_1P2LDO - @radio_mlb_lib.RADIO_MLB	9C6
VIN_3P3	VIN_3P3 - @radio_mlb_lib.RADIO_MLB	9C6
VIO	VIO - @radio_mlb_lib.RADIO_MLB	2B3 2B7 2D1 3C7 3C8 4B1 4C7 7B4
VIO_CONN	VIO_CONN - @radio_mlb_lib.RADIO_MLB	7B3
VMODE	VMODE - @radio_mlb_lib.RADIO_MLB	2C1 6B8
VMODE_DIV	VMODE_DIV - @radio_mlb_lib.RADIO_MLB	6B6

VPLL	VPLL - @radio_mlb_lib.RADIO_MLB	3B8 4B1
VRAMP	VRAMP - @radio_mlb_lib.RADIO_MLB	6C2
VREF	VREF - @radio_mlb_lib.RADIO_MLB	4C4
VRF1V5	VRF1V5 - @radio_mlb_lib.RADIO_MLB	4B1 5D4 6B8
VRF1_2V8	VRF1_2V8 - @radio_mlb_lib.RADIO_MLB	2D8 4D1 5B5 5C4 5C7 5C8 6A7 6D2 6D4 8C5
VRF1_2V8_BUCK	VRF1_2V8_BUCK - @radio_mlb_lib.RADIO_MLB	4D2
VRF1_2V8_BUCK_OUT	VRF1_2V8_BUCK_OUT - @radio_mlb_lib.RADIO_MLB	4D3
VRF1_2V8_FIL_FEM	VRF1_2V8_FIL_FEM - @radio_mlb_lib.RADIO_MLB	6D5
VRF1_LDO_OUT	VRF1_LDO_OUT - @radio_mlb_lib.RADIO_MLB	4D3
VRF1_SRC	VRF1_SRC - @radio_mlb_lib.RADIO_MLB	4B3
VRF3	VRF3 - @radio_mlb_lib.RADIO_MLB	4B1 5D4
VRTC	VRTC - @radio_mlb_lib.RADIO_MLB	3B8 4A6
VSD1	VSD1 - @radio_mlb_lib.RADIO_MLB	2B3 3D8 4B8
VSD2	VSD2 - @radio_mlb_lib.RADIO_MLB	2A3 2B7 2C8 3C8 3C8 3D4 4B8 4C4 5C5 7B4 7C8 8D4 9B7 9C2 9D7
VSD2_CONN	VSD2_CONN - @radio_mlb_lib.RADIO_MLB	7B3
VSD2_WIFI_BT	VSD2_WIFI_BT - @radio_mlb_lib.RADIO_MLB	9D5
VSIM	VSIM - @radio_mlb_lib.RADIO_MLB	2C7 3B8 4B2 7B5 7C5
VTCXO	VTCXO - @radio_mlb_lib.RADIO_MLB	8D3
VTUNE	VTUNE - @radio_mlb_lib.RADIO_MLB	5B8 5C3
V_MEMORY	V_MEMORY - @radio_mlb_lib.RADIO_MLB	3C5 3D1
WDOG	WDOG - @radio_mlb_lib.RADIO_MLB	2C7 4B7 7A6
WLAN_32K_CLK	WLAN_32K_CLK - @radio_mlb_lib.RADIO_MLB	2C8 9B6
WLAN_RESET_N	WLAN_RESET_N - @radio_mlb_lib.RADIO_MLB	7B1 7C8 9B7
WLAN_SDIO_CLK	WLAN_SDIO_CLK - @radio_mlb_lib.RADIO_MLB	7C5 9B7
WLAN_SDIO_CLK_XW	WLAN_SDIO_CLK_XW - @radio_mlb_lib.RADIO_MLB	9B6
WLAN_SDIO_CMD	WLAN_SDIO_CMD - @radio_mlb_lib.RADIO_MLB	7C5 9B7
WLAN_SDIO_CMD_XW	WLAN_SDIO_CMD_XW - @radio_mlb_lib.RADIO_MLB	9B6
WLAN_SDIO_DATA0_XW	WLAN_SDIO_DATA0_XW - @radio_mlb_lib.RADIO_MLB	9B6
WLAN_SDIO_DATA1_XW	WLAN_SDIO_DATA1_XW - @radio_mlb_lib.RADIO_MLB	9B6
WLAN_SDIO_DATA2_XW	WLAN_SDIO_DATA2_XW - @radio_mlb_lib.RADIO_MLB	9B6
WLAN_SDIO_DATA3_XW	WLAN_SDIO_DATA3_XW - @radio_mlb_lib.RADIO_MLB	9B6
WLAN_SDIO_DATA<0>	WLAN_SDIO_DATA<0> - @radio_mlb_lib.RADIO_MLB	7C5 9B7
WLAN_SDIO_DATA<1>	WLAN_SDIO_DATA<1> - @radio_mlb_lib.RADIO_MLB	7C5 9B7
WLAN_SDIO_DATA<2>	WLAN_SDIO_DATA<2> - @radio_mlb_lib.RADIO_MLB	7C5 9B7
WLAN_SDIO_DATA<3>	WLAN_SDIO_DATA<3> - @radio_mlb_lib.RADIO_MLB	7C5 9B7

Title: Cref Part Report
Design: radio_mlb
Date: Jan 29 18:20:30 2009

C1	CAP_201	radio_mlb[6D5]	
C2	CAP_201	radio_mlb[6D4]	
C3	CAP_201	radio_mlb[6B8]	
C4	CAP_402	radio_mlb[4A8]	
C5	CAP_402	radio_mlb[3D2]	
C6	CAP_201	radio_mlb[5B7]	
C7	CAP_201	radio_mlb[5A6]	
C8	CAP_201	radio_mlb[5A6]	
C9	CAP_201	radio_mlb[4D7]	
C10	CAP_603	radio_mlb[4A8]	
C11	CAP_201	radio_mlb[4D7]	
C12	CAP_201	radio_mlb[4D8]	
C13	CAP_201	radio_mlb[6D2]	
C14	CAP_201	radio_mlb[2D1]	
C15	CAP_201	radio_mlb[5A6]	
C16	CAP_201	radio_mlb[5B6]	
C17	CAP_0201	radio_mlb[5A6]	
C18	CAP_201	radio_mlb[4D4]	
C19	CAP_201	radio_mlb[6B7]	
C20	CAP_201	radio_mlb[4D7]	
C21	CAP_201	radio_mlb[5D3]	
C22	CAP_603	radio_mlb[4D3]	
C23	CAP_201	radio_mlb[3D2]	
C24	CAP_402	radio_mlb[3D1]	
C25	CAP_201	radio_mlb[3D1]	
C26	CAP_402	radio_mlb[3D1]	
C27	CAP_402	radio_mlb[8C7]	
C28	CAP_402	radio_mlb[4C1]	
C29	CAP_201	radio_mlb[8C8]	
C30	CAP_201	radio_mlb[4D2]	
C31	CAP_201	radio_mlb[8D6]	
C32	CAP_603	radio_mlb[4C2]	
C33	CAP_402	radio_mlb[4C1]	
C34	CAP_201	radio_mlb[9C6]	
C35	CAP_201	radio_mlb[6B4]	
C36	CAP_201	radio_mlb[6B4]	
C37	CAP_201	radio_mlb[6B2]	
C38	CAP_201	radio_mlb[6B1]	
C39	CAP_201	radio_mlb[6B1]	
C40	CAP_201	radio_mlb[6A6]	
C41	CAP_201	radio_mlb[6B6]	
C42	CAP_201	radio_mlb[6B4]	
C43	CAP_603	radio_mlb[9C7]	
C44	CAP_201	radio_mlb[6A8]	
C45	CAP_201	radio_mlb[6C4]	
C46	CAP_201	radio_mlb[5C4]	
C47	CAP_201	radio_mlb[3A7]	
C48	CAP_402	radio_mlb[9C7]	
C49	CAP_201	radio_mlb[3D1]	
C50	CAP_201	radio_mlb[8C2]	
C51	CAP_201	radio_mlb[8C1]	
C52	CAP_201	radio_mlb[6B6]	
C53	CAP_201	radio_mlb[9C2]	
C54	CAP_201	radio_mlb[8B3]	
C55	CAP_201	radio_mlb[4D4]	
C56	CAP_201	radio_mlb[8D5]	
C57	CAP_402	radio_mlb[8D6]	
C58	CAP_201	radio_mlb[3C8]	
C59	CAP_201	radio_mlb[3C7]	
C60	CAP_402	radio_mlb[3A5]	
C61	CAP_201	radio_mlb[3C7]	
C62	CAP_201	radio_mlb[3C7]	
C63	CAP_201	radio_mlb[6A6]	
C64	CAP_201	radio_mlb[3A4]	
C65	CAP_201	radio_mlb[8D5]	
C66	CAP_201	radio_mlb[3A4]	
C67	CAP_201	radio_mlb[8C6]	
C68	CAP_201	radio_mlb[6D3]	
C69	CAP_402	radio_mlb[9D6]	
C70	CAP_201	radio_mlb[3B4]	
C72	CAP_201	radio_mlb[4A2]	
C73	CAP_201	radio_mlb[8C5]	
C80	CAP_201	radio_mlb[8A2]	
C81	CAP_201	radio_mlb[8C4]	
C82	CAP_201	radio_mlb[8B2]	
C89	CAP_402	radio_mlb[4C3]	
C90	CAP_402	radio_mlb[4B3]	
C101	CAP_402	radio_mlb[4B3]	
C102	CAP_402	radio_mlb[4B3]	
C118	CAP_402-LF	radio_mlb[4B2]	
C120	CAP_402	radio_mlb[4C2]	
C121	CAP_402-LF	radio_mlb[4B2]	
C123	CAP_402	radio_mlb[4C2]	
C124	CAP_402-LF	radio_mlb[4B2]	
C125	CAP_402	radio_mlb[4C2]	
C129	CAP_201	radio_mlb[6C4]	
C130	CAP_201	radio_mlb[6D2]	
C135	CAP_P_CASE-A4	radio_mlb[6D2]	
C139	CAP_201	radio_mlb[6C1]	
C144	CAP_402-1	radio_mlb[2B3]	
C145	CAP_603	radio_mlb[4B8]	
C146	CAP_201	radio_mlb[2B3]	
C147	CAP_201	radio_mlb[3C8]	
C156	CAP_603	radio_mlb[4C4]	
C157	CAP_201	radio_mlb[3C7]	
C158	CAP_201	radio_mlb[5B8]	
C159	CAP_201	radio_mlb[3C7]	
C160	CAP_402-LF	radio_mlb[5B8]	
C161	CAP_201	radio_mlb[5B3]	
C162	CAP_201	radio_mlb[5B8]	
C163	CAP_201	radio_mlb[5B8]	R84 radio_mlb[2A7]
C164	CAP_201	radio_mlb[5D7]	
C167	CAP_201	radio_mlb[5B7]	
C171	CAP_201	radio_mlb[5B4]	
C172	CAP_201	radio_mlb[5B4]	
C173	CAP_201	radio_mlb[5C4]	
C174	CAP_201	radio_mlb[5D4]	
C175	CAP_201	radio_mlb[5D4]	
C176	CAP_201	radio_mlb[5C4]	
C177	CAP_201	radio_mlb[5D3]	
C178	CAP_0201	radio_mlb[5C4]	
C179	CAP_201	radio_mlb[5C3]	
C184	CAP_402	radio_mlb[5D4]	
C185	CAP_201	radio_mlb[5C3]	
C186	CAP_201	radio_mlb[5C3]	
C187	CAP_201	radio_mlb[5D3]	
C188	CAP_201	radio_mlb[5C2]	
C189	CAP_201	radio_mlb[5D2]	
C190	CAP_201	radio_mlb[5D3]	
C191	CAP_201	radio_mlb[5C2]	
C192	CAP_402	radio_mlb[5D2]	
C193	CAP_201	radio_mlb[5D2]	
C195	CAP_402-1	radio_mlb[3D8]	
C196	CAP_402-1	radio_mlb[3D8]	
C197	CAP_402-1	radio_mlb[3C8]	
C198	CAP_201	radio_mlb[3D7]	
C199	CAP_201	radio_mlb[3D7]	
C200	CAP_201	radio_mlb[3C8]	
C201	CAP_201	radio_mlb[3C7]	
C202	CAP_201	radio_mlb[3D7]	
C203	CAP_201	radio_mlb[3D7]	
C205	CAP_201	radio_mlb[3B8]	
C213	CAP_201	radio_mlb[8C4]	
C214	CAP_201	radio_mlb[8C4]	
C215	CAP_201	radio_mlb[8B4]	
C216	CAP_201	radio_mlb[8B3]	
C224	CAP_402	radio_mlb[4B2]	
C225	CAP_201	radio_mlb[8B3]	
C227	CAP_402-1	radio_mlb[2A3]	
C228	CAP_201	radio_mlb[2A3]	
C229	CAP_201	radio_mlb[2A3]	
C230	CAP_201	radio_mlb[3B8]	
C231	CAP_201	radio_mlb[3C8]	
C232	CAP_201	radio_mlb[3B7]	
C233	CAP_201	radio_mlb[3C8]	
C235	CAP_201	radio_mlb[3B7]	
C236	CAP_201	radio_mlb[6B3]	
C237	CAP_201	radio_mlb[6B6]	
C238	CAP_603	radio_mlb[6B5]	
C241	CAP_603	radio_mlb[6B3]	
C242	CAP_201	radio_mlb[6B6]	
C243	CAP_201	radio_mlb[6B3]	
C244	CAP_201	radio_mlb[6B8]	
C245	CAP_201	radio_mlb[6B8]	
C246	CAP_603	radio_mlb[6B8]	
C256	CAP_603	radio_mlb[4D5]	
C260	CAP_402-LF	radio_mlb[4C2]	
C262	CAP_402-1	radio_mlb[2B4]	
C263	CAP_201	radio_mlb[2B4]	
C270	CAP_201	radio_mlb[8D7]	
C271	CAP_402	radio_mlb[8D7]	
C272	CAP_402	radio_mlb[8D7]	
C273	CAP_402-1	radio_mlb[2B3]	
C274	CAP_201	radio_mlb[2B4]	
C275	CAP_201	radio_mlb[2B3]	
C276	CAP_201	radio_mlb[3A8]	
C277	CAP_201	radio_mlb[3B8]	
C281	CAP_201	radio_mlb[8C4]	
C282	CAP_402-LF	radio_mlb[4A6]	
C283	CAP_201	radio_mlb[6B8]	
C287	CAP_201	radio_mlb[8D2]	
C289	CAP_201	radio_mlb[2D8]	
C291	CAP_402-LF	radio_mlb[8D3]	
C292	CAP_402	radio_mlb[4D6]	
C293	CAP_402	radio_mlb[4D6]	
C294	CAP_402	radio_mlb[4D5]	
C303	CAP_201	radio_mlb[6D4]	
C304	CAP_201	radio_mlb[6B4]	
C306	CAP_201	radio_mlb[6D5]	
C307	CAP_201	radio_mlb[6D5]	
C308	CAP_201	radio_mlb[6D5]	
C309	CAP_201	radio_mlb[6D5]	
C315	CAP_201	radio_mlb[6D5]	
C319	CAP_201	radio_mlb[6B2]	
C320	CAP_201	radio_mlb[6B4]	
C321	CAP_201	radio_mlb[6B7]	
C322	CAP_201	radio_mlb[5A8]	
C328	CAP_201	radio_mlb[6B3]	
C329	CAP_201	radio_mlb[5C3]	
C335	CAP_201	radio_mlb[5C7]	
C336	CAP_201	radio_mlb[6C4]	
C410	CAP_603	radio_mlb[4B8]	
C411	CAP_201	radio_mlb[4D2]	
C412	CAP_402	radio_mlb[4D3]	
C414	CAP_201	radio_mlb[6B2]	
C415	CAP_201	radio_mlb[6B4]	
C417	CAP_201	radio_mlb[9D4]	
C418	CAP_201	radio_mlb[9D5]	
C419	CAP_201	radio_mlb[9D6]	
C421	CAP_201	radio_mlb[9C6]	
D1	DIODE_SCHOT_2P_SOD-9	radio_mlb[4B7]	
	23-HF		
D3	DIODE_SCHOT_2P_SOD-9	radio_mlb[4A7]	
	23-HF		
FL1	FILTER_2P_0201-1	radio_mlb[4C7]	
FL5	FILTER_2P_0201-1	radio_mlb[4C7]	
FL6	FILTER_2P_0201	radio_mlb[4D5]	
FL7	FILTER_2P_0201-1	radio_mlb[4C7]	
FL8	FILTER_2P_0201	radio_mlb[4D5]	
FL10	FILTER_2P_0201	radio_mlb[6D4]	
FL11	FILTER_LFB2H_2.5X2X1	radio_mlb[9D2]	
	-SM		
FL12	FILTER_SAFEB1G57KB_L	radio_mlb[8B1]	
	LP		
FL14	FILTER_SAFEB1G57FM_L	radio_mlb[8B4]	
	LP		
G2	OSC_6P_PN25VD_SM1	radio_mlb[5B8]	
G3	OSC_4PIN_NCGND_2.5X2	radio_mlb[8D3]	
	-SM		
J1	CON_F2ST_COAX_4MT_SM	radio_mlb[8C2]	
	_F-ST-SM		
J2	CON_M80ST_D_SMA_M-ST	radio_mlb[7C3]	
	-SM		
J3	CON_F2ST_COAX_S2MT_S	radio_mlb[8C1]	
	M_F-ST-SM		
J4	CON_F2ST_COAX_S2MT_S	radio_mlb[6D2]	
	M_F-ST-SM		
J5	CON_F2ST_COAX_4MT_SM	radio_mlb[6D3]	
	_F-ST-SM		
J7	BATTERY_4P2_SM-NSP	radio_mlb[4D8]	
L1	IND_0201	radio_mlb[6D7]	
L2	IND_0201	radio_mlb[6D7]	
L3	IND_0402	radio_mlb[6D2]	
L4	IND_VLF3010ST-SM	radio_mlb[4D2]	
L5	FIL_LFD181G57DPFC087	radio_mlb[8C3]	
	_LLP-0603		
L6	IND_0201	radio_mlb[6D7]	
L7	IND_0201	radio_mlb[6D7]	
L8	IND_0201	radio_mlb[5D3]	
L9	IND_0201	radio_mlb[6C4]	
L10	IND_201	radio_mlb[6B1]	
L11	IND_VLS252012-SM	radio_mlb[4B7]	
L12	IND_BRL2012T2R2M	radio_mlb[4D2]	
L13	IND_0201	radio_mlb[6C7]	
L14	IND_0603-HF	radio_mlb[4D1]	
L15	IND_VLF3010AT-SM-HF	radio_mlb[9C6]	
L16	IND_0201	radio_mlb[5A7]	
L17	IND_0201	radio_mlb[6C7]	
L18	IND_0201	radio_mlb[6C7]	
L19	IND_0201	radio_mlb[6C7]	
L20	IND_VLF	radio_mlb[5C6]	
L21	IND_0201	radio_mlb[5A6]	
L22	IND_0201	radio_mlb[6B6]	
L23	IND_0201	radio_mlb[3B5]	
L24	IND_0201	radio_mlb[3B5]	
L34	IND_VLF3012ST-HF	radio_mlb[4B7]	
L36	IND_0201	radio_mlb[5A5]	
L38	IND_0201	radio_mlb[5B6]	
L40	IND_0201	radio_mlb[5C4]	
L41	IND_SM	radio_mlb[5B2]	
L46	IND_0201	radio_mlb[5A5]	
L52	IND_0201	radio_mlb[8B5]	
L54	IND_0201	radio_mlb[8B3]	
L60	IND_0201	radio_mlb[8A2]	
L65	IND_0201	radio_mlb[6D4]	
L78	IND_0201	radio_mlb[6C7]	
L79	IND_0201	radio_mlb[6C7]	
L80	IND_0201	radio_mlb[6D7]	
L81	IND_0201	radio_mlb[6D7]	
L84	IND_0201	radio_mlb[6A5]	
L85	IND_0402	radio_mlb[6D3]	
R1	RES_201	radio_mlb[8B8]	
R2	RES_201	radio_mlb[2D4]	
R3	RES_201	radio_mlb[3A5]	
R4	RES_201	radio_mlb[3B5]	
R5	RES_201	radio_mlb[3B5]	
R6	RES_201	radio_mlb[2A8]	
R7	RES_201	radio_mlb[6B8]	
R8	RES_201	radio_mlb[4D8]	
R9	RES_201	radio_mlb[2C8]	
R10	RES_201	radio_mlb[8B7]	
R11	RES_201	radio_mlb[3B4]	
R12	RES_201	radio_mlb[8B7]	
R13	RES_201	radio_mlb[8B3]	
R14	RES_201	radio_mlb[6B8]	
R15	RES_201	radio_mlb[8A8]	
R16	RES_201	radio_mlb[8A8]	
R17	RES_201	radio_mlb[8A7]	
R18	RES_201	radio_mlb[2C7]	
R19	RES_201	radio_mlb[8C5]	
R20	RES_402	radio_mlb[8C2]	
R21	RES_201	radio_mlb[2C7]	
R22	RES_201	radio_mlb[4D3]	
R23	RES_201	radio_mlb[8C5]	
R24	RES_201	radio_mlb[4D4]	
R25	RES_201	radio_mlb[4D4]	
R26	RES_201	radio_mlb[8A7]	
R27	RES_201	radio_mlb[4C8]	
R28	RES_201	radio_mlb[7B3]	
R29	RES_201	radio_mlb[8D2]	
R30	THERMISTER_0201	radio_mlb[2D4]	
R31	RES_201	radio_mlb[8B2]	
R32	RES_201	radio_mlb[7B3]	
R33	RES_201	radio_mlb[3B8]	
R34	RES_201	radio_mlb[2D7]	
R35	RES_805	radio_mlb[4D7]	
R36	RES_201	radio_mlb[4C5]	
R37	RES_201	radio_mlb[2A8]	
R38	RES_201	radio_mlb[3C4]	
R40	RES_201	radio_mlb[9B2]	
R41	RES_201	radio_mlb[2A8]	
R43	RES_201	radio_mlb[2A8]	
R44	RES_201	radio_mlb[2B7]	
R45	RES_201	radio_mlb[2A7]	
R46	RES_201	radio_mlb[2C3]	
R47	RES_201	radio_mlb[2C4]	
R48	RES_201	radio_mlb[2A8]	
R49	RES_201	radio_mlb[2C4]	
R50	RES_201	radio_mlb[2A8]	
R51	RES_201	radio_mlb[2A3]	
R52	RES_201	radio_mlb[5A8]	
R53	RES_201	radio_mlb[4A3]	
R54	RES_201	radio_mlb[4D3]	
R55	RES_201	radio_mlb[4D2]	
R56	RES_201	radio_mlb[2C4]	
R57	RES_201	radio_mlb[2C4]	
R58	RES_201	radio_mlb[8C5]	
R59	RES_201	radio_mlb[8B5]	
R60	RES_201	radio_mlb[4D2]	
R61	RES_201	radio_mlb[2A8]	
R63	RES_201	radio_mlb[9B7]	
R64	RES_201	radio_mlb[5B4]	
R65	RES_201	radio_mlb[2A7]	
R66	RES_201	radio_mlb[9C4]	
R67	RES_201	radio_mlb[9C3]	
R69	RES_201	radio_mlb[9C2]	
R70	RES_201	radio_mlb[6C1]	
R71	RES_201	radio_mlb[5C4]	
R72	RES_201	radio_mlb[2A7]	
R73	RES_201	radio_mlb[5C8]	
R75	RES_201	radio_mlb[3A6]	
R77	RES_201	radio_mlb[5B5]	
R79	RES_201	radio_mlb[7C4]	
R80	RES_201	radio_mlb[2A7]	
R81	RES_201	radio_mlb[2A7]	
R82	RES_201	radio_mlb[2A7]	
R83	RES_201	radio_mlb[5C4]	
R85	RES_201	radio_mlb[5C3]	
R88	RES_201	radio_mlb[5C2]	
R89	RES_201	radio_mlb[2D7]	
R92	RES_201	radio_mlb[2D7]	
R94	RES_201	radio_mlb[3B7]	
R96	RES_402	radio_mlb[2D7]	
R97	RES_201	radio_mlb[2D3]	
R99	RES_201	radio_mlb[2B3]	
R102	RES_201	radio_mlb[2D7]	
R104	RES_201	radio_mlb[6D5]	
R105	RES_201	radio_mlb[6D6]	
R106	RES_201	radio_mlb[6D6]	
R107	RES_201	radio_mlb[6D6]	
R109	RES_201	radio_mlb[6B6]	
R114	RES_201	radio_mlb[6B7]	
R116	RES_201	radio_mlb[6B4]	
R118	RES_201	radio_mlb[2C3]	
R119	RES_201	radio_mlb[2C3]	
R120	RES_201	radio_mlb[4C7]	
R121	RES_201	radio_mlb[4C7]	
R122	RES_201	radio_mlb[4C3]	
R124	RES_201	radio_mlb[8B8]	
R125	RES_201	radio_mlb[8B8]	
R153	RES_201	radio_mlb[6B7]	
R155	RES_201	radio_mlb[6C4]	
R156	RES_201	radio_mlb[6C4]	
R240	THERMISTER_0201	radio_mlb[5A8]	
R412	RES_201	radio_mlb[4D2]	
R413	RES_201	radio_mlb[2A7]	
R415	RES_201	radio_mlb[3B4]	
SP1	SPRING_CLIP_1P_EMI_N	radio_mlb[6D3]	
	88-MLB-SM		
TP1	TP_TP-P6	radio_mlb[7A3]	
TP6	TP_TP-1P0-TOP	radio_mlb[7C3]	
TP7	TP_TP-1P0-TOP	radio_mlb[7B3]	
TP8	TP_TP-1P0-TOP	radio_mlb[7B3]	
TP15	TP_TP-P6	radio_mlb[7B7]	
TP16	TP_TP-1P0-TOP	radio_mlb[7D3]	
TP33	TP_TP-P6	radio_mlb[7A7]	
TP41	TP_TP-1P0-TOP	radio_mlb[4D8]	
TP43	TP_TP-1P0-TOP	radio_mlb[4D8]	
TP56	TP_TP-P6	radio_mlb[7A5]	
TP59	TP_TP-P6	radio_mlb[7A5]	
TP60	TP_TP-P6	radio_mlb[7B5]	
TP64	TP_TP-P6	radio_mlb[7A5]	
TP65	TP_TP-P6	radio_mlb[7A5]	
TP74	TP_TP-P6	radio_mlb[7A3]	
U1	FLASH_DRAM_128MB_128	radio_mlb[3D3]	
	MB_BGA133_BGA		
U2	MAX8839_WLP	radio_mlb[4D3]	
U3	HFQRX5DCC001_LGA	radio_mlb[5A4]	
U4	LMSP4LMA_QFN	radio_mlb[6D5]	
U5	AMP_TQM616035_LGA	radio_mlb[6B5]	
U6	MOD_WI_FI_BT_LGA64_1	radio_mlb[9C5]	
	_LGA		
U7	74LVC1G79_SOT891	radio_mlb[5C4]	
U8	SN74AUC1G126_BGA-YZP	radio_mlb[2D2]	
U11	74LVC2G34_SOT891	radio_mlb[6D1]	
U14	SKY77340_MCM-HF	radio_mlb[6D2]	
U16	PMB6952_BGA	radio_mlb[5D2 5D6]	
U19	AMP_TQM676031_LGA	radio_mlb[6B3]	
U22	PMB8878_BGA	radio_mlb[2D2 2D6]	
U22	PMB8878_BGA	radio_mlb[3D7]	
U23	74LVC1G08GF_SOT891	radio_mlb[2D8]	
U25	PMB6820_WFSGA	radio_mlb[4C5]	
U31	PMB2525_BGA	radio_mlb[8C7]	
U33	BGA615L7_TSLP	radio_mlb[8B3]	
U37	AMP_TQM666032_LGA	radio_mlb[6B8]	
U410	HMM1822A2_LGA	radio_mlb[6A6]	
XW1	SHORT_SM	radio_mlb[6D1]	
XW2	SHORT10L25_WITH_ALTS	radio_mlb[4D7]	
	_SM		
XW3	SHORT_SHORT-0201	radio_mlb[8D5]	
XW4	SHORT10L25_WITH_ALTS	radio_mlb[4D6]	
	_SM		
XW5	SHORT_SM	radio_mlb[9B7]	
XW6	SHORT10L25_WITH_ALTS	radio_mlb[3A4]	
	_SM		
XW7	SHORT_SHORT-0201	radio_mlb[3D3]	
XW8	SHORT_SM	radio_mlb[9B7]	
XW9	SHORT10L25_WITH_ALTS	radio_mlb[2D8]	
	_SM		
XW10	SHORT_SM	radio_mlb[6D2]	
XW11	SHORT_SHORT-0201	radio_mlb[9C6]	
XW12	SHORT_SM	radio_mlb[9B7]	
XW13	SHORT_SM	radio_mlb[9B7]	
XW14	SHORT_SM	radio_mlb[9B7]	
XW15	SHORT_SM	radio_mlb[9B7]	
XW17	SHORT_SHORT-0201	radio_mlb[9D6]	
XW18	SHORT_SHORT-0201	radio_mlb[9D6]	
XW19	SHORT_SHORT-0201	radio_mlb[9B6]	
XW21	SHORT_SM	radio_mlb[3A7]	
XW36	SHORT_SHORT-0201	radio_mlb[4C6]	
Y1	CRYSTAL_3.2X1.5X.6-S	radio_mlb[3A4]	
	M		

N88 H2-BASED SUB-DESIGN 03/23/09(DVT2) A BOARD REV 5

PDF PAGE	CSA PAGE	CONTENTS	SYNC MASTER	DATE
1	1	Table of Contents	N/A	N/A
2	2	AP MAIN	N/A	N/A
3	3	AP PWR,AP WIFI/MIPI	N/A	N/A
4	4	AP NAND	N/A	N/A
5	5	AP RGB/CLCD	N/A	N/A
6	6	AP TVOUT	N/A	N/A
7	7	L61 AUDIO INTERFACE	N/A	N/A
8	8	L61 HP	N/A	N/A
9	9	PMU	N/A	N/A
10	10	SIM,ACCEL,VIBE	N/A	N/A
11	11	INTERFACE ASSIGNMENTS	N/A	N/A
12	12	DOCK	N/A	N/A
13	13	NIMBUS	N/A	N/A
14	14	CAMERA	N/A	N/A
15	15	RADIO CONNECTIVITY	N/A	N/A
16	16	PROX,ALS	N/A	N/A
17	32	Cross Reference Page		
18	33	Cross Reference Page		
19	34	Cross Reference Page		
20	35	Cross Reference Page		
21	36	Cross Reference Page		
22	37	Cross Reference Page		
23	38	Cross Reference Page		
24	39	Cross Reference Page		
25	40	Cross Reference Page		

PART#	QTY	DESCRIPTION	REFERENCE DESIGNATOR(S)	CRITICAL	BOM OPTION
951-0719	1	P4C_DEV_SCHEMATIC	SCH	Y	
920-0596	1	P4C_DEV_PCB	PCB	Y	
825-2029	1	EEE	EEE:???	Y	

SOCKET BOM OPTIONS

PART#	QTY	DESCRIPTION	REFERENCE DESIGNATOR(S)	CRITICAL	BOM OPTION
998-1925	1	M2_TEST_SOCKET	SKT1	Y	SOCKET
998-1922	1	NUMBUS TEST SOCKET	SKT2	Y	SOCKET

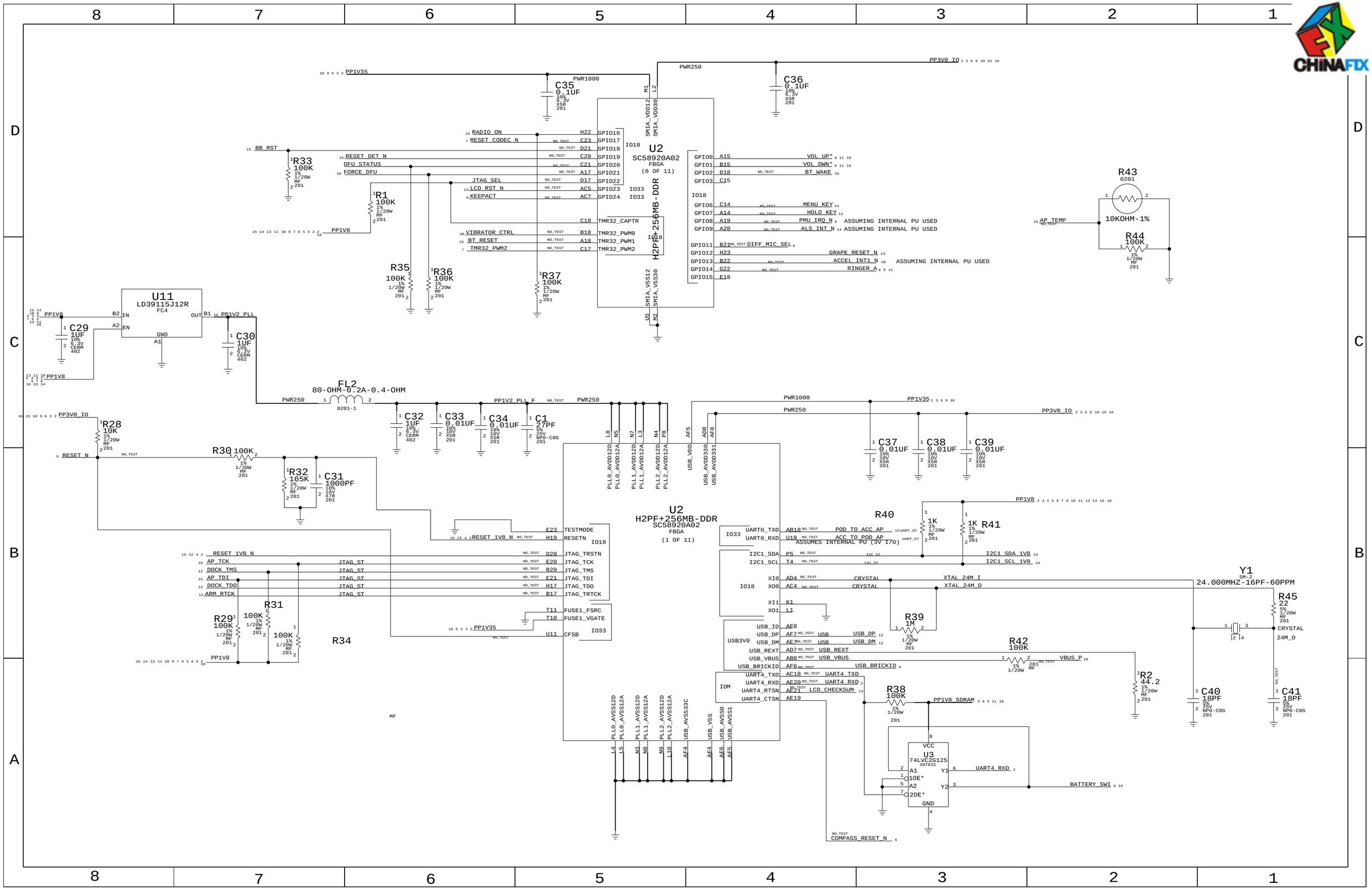
U2
SC58920A02
FBGA
(6 OF 11)
H2PF+256MB-DDR
U2
H2PF+256MB-DDR
SC58920A02
FBGA
(1 OF 11)
U11
LD39115J12R
FC4
U3
74LVC2G125
SOT833
Y1
SM-2
24.000MHZ-16PF-60PPM
FL2
80-OHM-0.2A-0.4-OHM
0201-1
C35
0.1UF
C36
0.1UF
C29
1UF
C30
1UF
C32
1UF
C33
0.01UF
C34
0.01UF
C1
27PF
C37
0.01UF
C38
0.01UF
C39
0.01UF
C31
1000PF
C40
18PF
C41
18PF
R33
100K
R1
100K
R35
100K
R36
100K
R37
100K
R43
0201
10KOHM-1%
R44
100K
R28
10K
R30
100K
R32
165K
R29
100K
R31
100K
R34
100K
R40
1K
R41
1K
R39
1M
R42
100K
R38
100K
R45
22
R2
44.2
PP1V35
PP3V0_IO
PP1V8
PP1V2_PLL
PP1V2_PLL_F
PWR250
PWR1000
PP1V8_SDRAM
RADIO_ON
RESET_CODEC_N
BB_RST
RESET_DET_N
DFU_STATUS
FORCE_DFU
JTAG_SEL
LCD_RST_N
KEEPACT
VIBRATOR_CTRL
BT_RESET
TMR32_PWM2
AP_TEMP
VOL_UP*
VOL_DWN*
BT_WAKE
MENU_KEY
HOLD_KEY
PMU_IRQ_N
ALS_INT_N
DIFF_MIC_SEL
GRAPE_RESET_N
ACCEL_INT1_N
RINGER_A
ASSUMING INTERNAL PU USED
RESET_N
RESET_1V8_N
AP_TCK
DOCK_TMS
AP_TDI
DOCK_TDO
ARM_RTCK
JTAG_ST
POD_TO_ACC_AP
ACC_TO_POD_AP
ASSUMES INTERNAL PU (3V IO)
I2C1_SDA_1V8
I2C1_SCL_1V8
CRYSTAL
XTAL_24M_I
XTAL_24M_O
24M_O
USB_DP
USB_DM
USB_REXT
USB_VBUS
VBUS_P
USB_BRICKID
UART4_TXD
UART4_RXD
LCD_CHECKSUM
BATTERY_SWI
COMPASS_RESET_N
TESTMODE
RESETN
FUSE1_FSRC
FUSE1_VGATE
CFSB
CHINAFDX

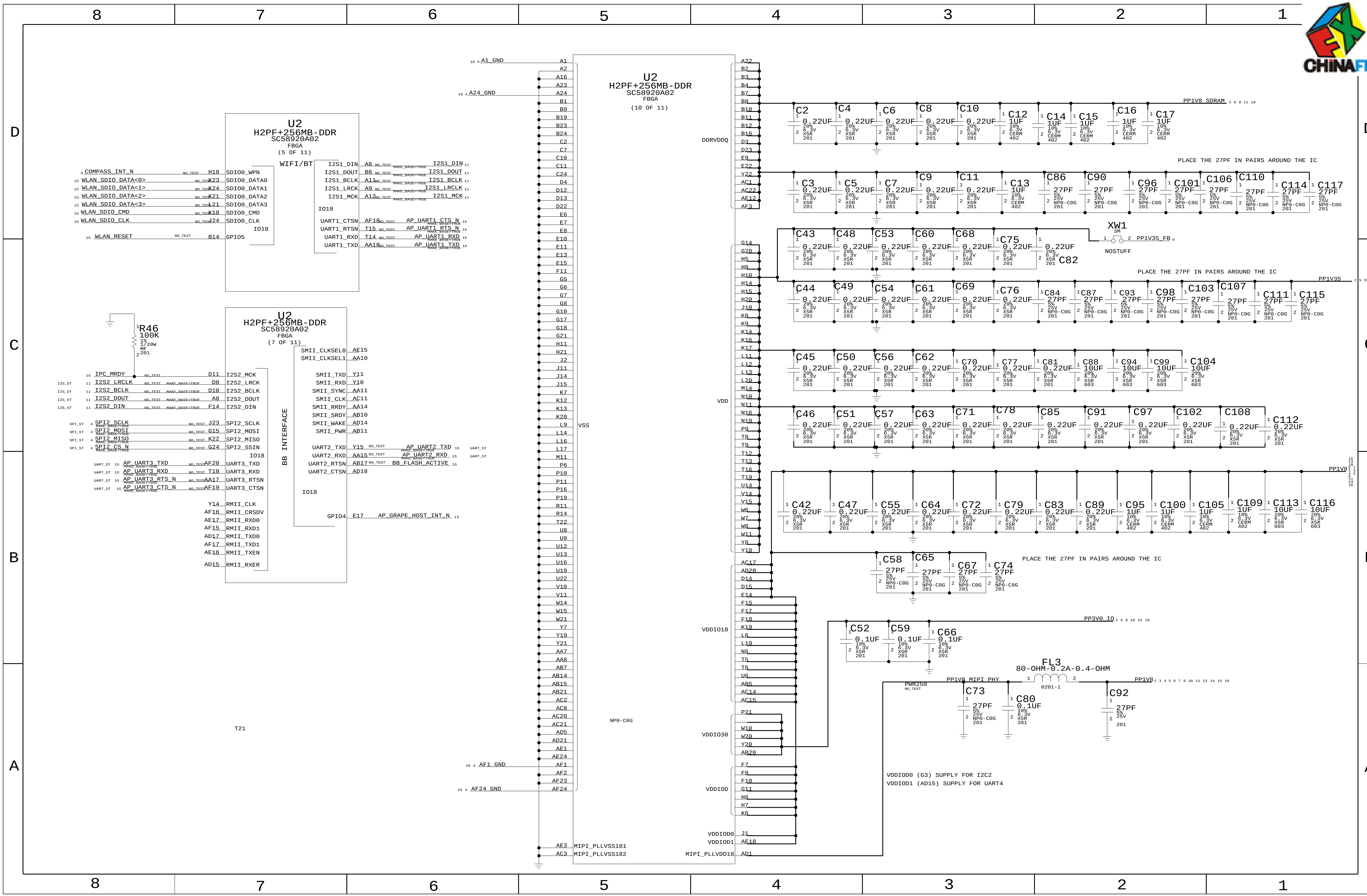

CHINAFIX
U2
H2PF+256MB-DDR
SC58920A02
FBGA
(5 OF 11)
WIFI/BT
COMPASS_INT_N
WLAN_SDIO_DATA<0>
WLAN_SDIO_DATA<1>
WLAN_SDIO_DATA<2>
WLAN_SDIO_DATA<3>
WLAN_SDIO_CMD
WLAN_SDIO_CLK
WLAN_RESET
SDIO0_WPN
SDIO0_DATA0
SDIO0_DATA1
SDIO0_DATA2
SDIO0_DATA3
SDIO0_CMD
SDIO0_CLK
GPIO5
IO18
I2S1_DIN
I2S1_DOUT
I2S1_BCLK
I2S1_LRCK
I2S1_MCK
UART1_CTSN
UART1_RTSN
UART1_RXD
UART1_TXD
AP_UART1_CTS_N
AP_UART1_RTS_N
AP_UART1_RXD
AP_UART1_TXD
R46
100K
1%
1/20W
MF
201
U2
H2PF+256MB-DDR
SC58920A02
FBGA
(7 OF 11)
BB INTERFACE
IPC_MRDY
I2S2_LRCLK
I2S2_BCLK
I2S2_DOUT
I2S2_DIN
SPI2_SCLK
SPI2_MOSI
SPI2_MISO
SPI2_CS_N
AP_UART3_TXD
AP_UART3_RXD
AP_UART3_RTS_N
AP_UART3_CTS_N
I2S2_MCK
I2S2_LRCK
I2S2_BCLK
I2S2_DOUT
I2S2_DIN
SPI2_SCLK
SPI2_MOSI
SPI2_MISO
SPI2_SSIN
UART3_TXD
UART3_RXD
UART3_RTSN
UART3_CTSN
RMII_CLK
RMII_CRSDV
RMII_RXD0
RMII_RXD1
RMII_TXD0
RMII_TXD1
RMII_TXEN
RMII_RXER
SMII_CLKSEL0
SMII_CLKSEL1
SMII_TXD
SMII_RXD
SMII_SYNC
SMII_CLK
SMII_RRDY
SMII_SRDY
SMII_WAKE
SMII_PWR
UART2_TXD
UART2_RXD
UART2_RTSN
UART2_CTSN
AP_UART2_TXD
AP_UART2_RXD
BB_FLASH_ACTIVE
GPIO4
AP_GRAPE_HOST_INT_N
T21
A1_GND
A24_GND
AF1_GND
AF24_GND
U2
H2PF+256MB-DDR
SC58920A02
FBGA
(10 OF 11)
VSS
DDRVDDQ
VDD
VDDIO18
VDDIO30
VDDIOD
VDDIOD0
VDDIOD1
MIPI_PLLVSS181
MIPI_PLLVSS182
MIPI_PLLVDD18
NP0-C0G
PP1V8_SDRAM
PLACE THE 27PF IN PAIRS AROUND THE IC
XW1
SM
PP1V35_FB
NOSTUFF
PP1V35
PP1V8
PLACE THE 27PF IN PAIRS AROUND THE IC
PP3V0_IO
FL3
80-OHM-0.2A-0.4-OHM
0201-1
PP1V8_MIPI_PHY
PWR250
NO_TEST
VDDIOD0 (G3) SUPPLY FOR I2C2
VDDIOD1 (AD15) SUPPLY FOR UART4

NAND FLASH

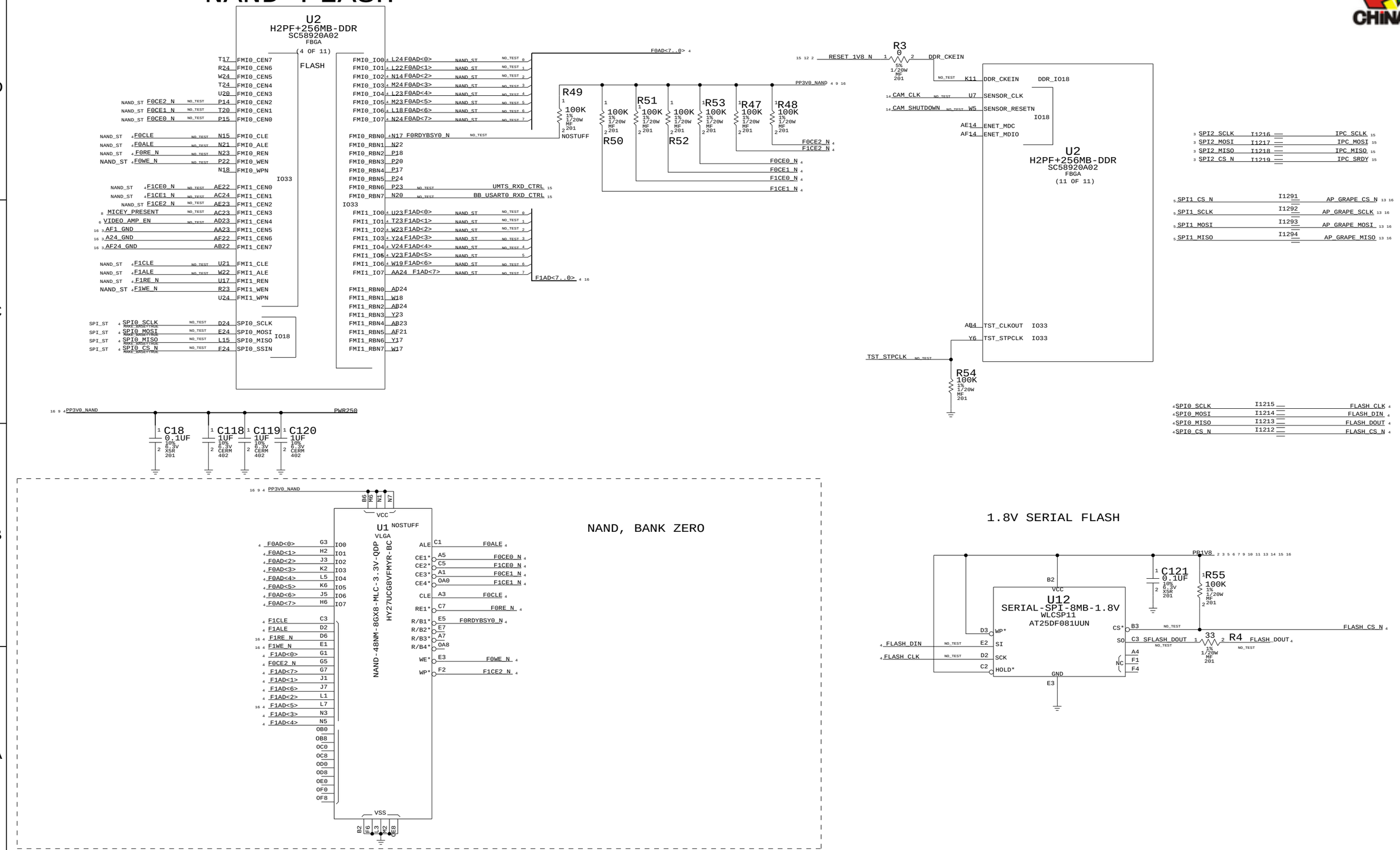
U2
H2PF+256MB-DDR
SC58920A02
FBGA
(4 OF 11)
FLASH
IO33
IO18
R49 100K 1% 1/20W MF 201 NOSTUFF
R50 100K 1% 1/20W MF 201
R51 100K 1% 1/20W MF 201
R52 100K 1% 1/20W MF 201
R53 100K 1% 1/20W MF 201
R47 100K 1% 1/20W MF 201
R48 100K 1% 1/20W MF 201
R3 0 5% 1/20W MF 201
RESET_1V8_N
DDR_CKEIN
DDR_IO18
CAM_CLK
CAM_SHUTDOWN
SENSOR_CLK
SENSOR_RESETN
ENET_MDC
ENET_MDIO
TST_CLKOUT
TST_STPCLK
R54 100K 1% 1/20W MF 201
SPI2_SCLK
SPI2_MOSI
SPI2_MISO
SPI2_CS_N
IPC_SCLK
IPC_MOSI
IPC_MISO
IPC_SRDY
SPI1_CS_N
SPI1_SCLK
SPI1_MOSI
SPI1_MISO
AP_GRAPE_CS_N
AP_GRAPE_SCLK
AP_GRAPE_MOSI
AP_GRAPE_MISO
SPI0_SCLK
SPI0_MOSI
SPI0_MISO
SPI0_CS_N
FLASH_CLK
FLASH_DIN
FLASH_DOUT
FLASH_CS_N
PP3V0_NAND
PWR250
C18 0.1UF 10% 6.3V X5R 201
C118 1UF 10% 6.3V CERM 402
C119 1UF 10% 6.3V CERM 402
C120 1UF 10% 6.3V CERM 402
U1 NOSTUFF
VLGA
NAND-48NM-8GX8-MLC-3.3V-QDP
HY27UCG8VFMYR-BC
VCC
VSS
NAND, BANK ZERO
1.8V SERIAL FLASH
PP1V8
C121 0.1UF 10% 6.3V X5R 201
R55 100K 1% 1/20W MF 201
U12
SERIAL-SPI-8MB-1.8V
WLCSP11
AT25DF081UUN
R4 33 1% 1/20W MF 201

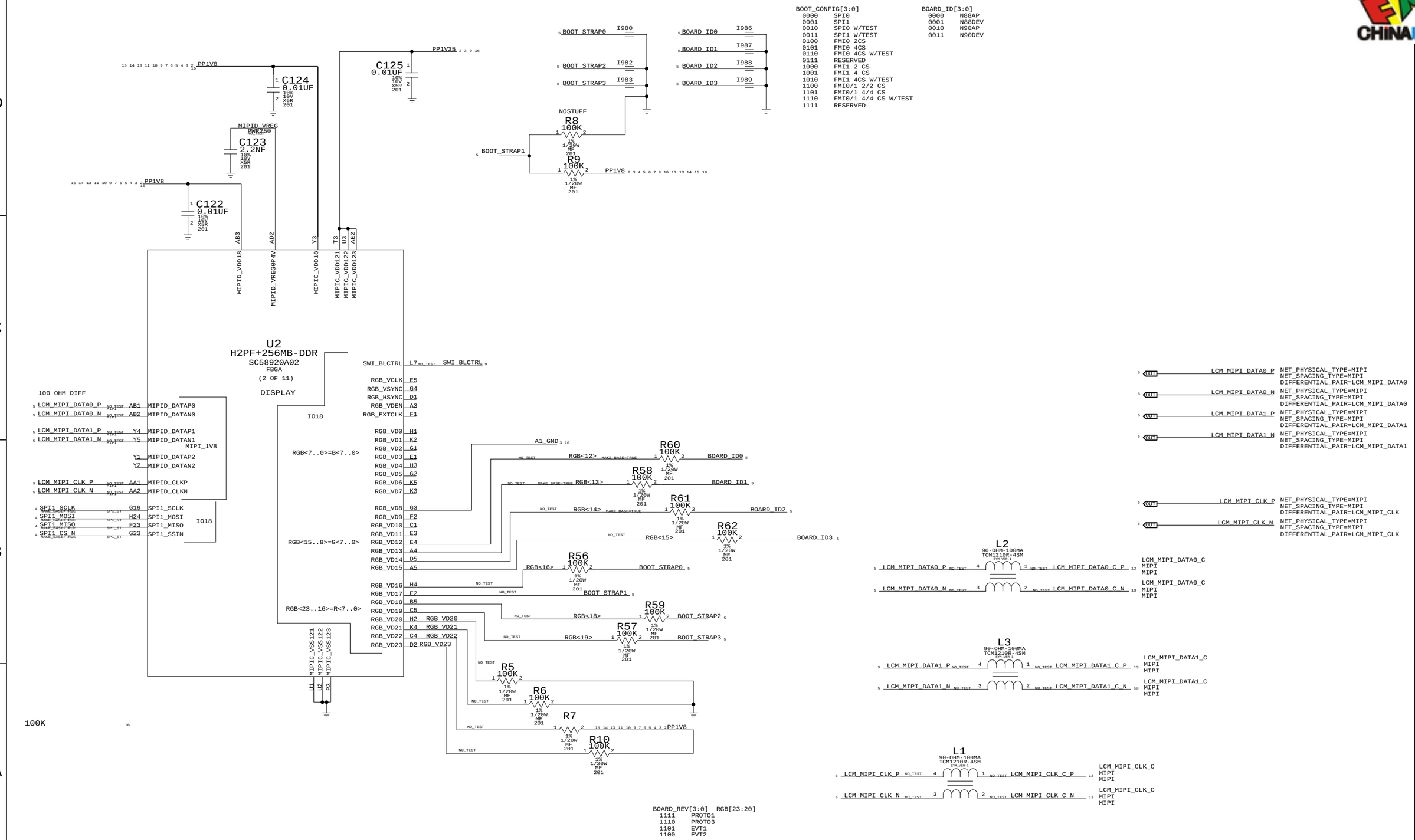
BOOT_CONFIG[3:0]
0000 SPI0
0001 SPI1
0010 SPI0 W/TEST
0011 SPI1 W/TEST
0100 FMI0 2CS
0101 FMI0 4CS
0110 FMI0 4CS W/TEST
0111 RESERVED
1000 FMI1 2 CS
1001 FMI1 4 CS
1010 FMI1 4CS W/TEST
1100 FMI0/1 2/2 CS
1101 FMI0/1 4/4 CS
1110 FMI0/1 4/4 CS W/TEST
1111 RESERVED
BOARD_ID[3:0]
0000 N88AP
0001 N88DEV
0010 N90AP
0011 N90DEV
BOARD_REV[3:0] RGB[23:20]
1111 PROTO1
1110 PROTO3
1101 EVT1
1100 EVT2
U2
H2PF+256MB-DDR
SC58920A02
FBGA
(2 OF 11)
DISPLAY
100 OHM DIFF
C124 0.01UF
C125 0.01UF
C123 2.2NF
C122 0.01UF
R8 100K
R9 100K
R60 100K
R58 100K
R61 100K
R62 100K
R56 100K
R59 100K
R57 100K
R5 100K
R6 100K
R7
R10 100K
L2 90-OHM-100MA TCM1210R-4SM
L3 90-OHM-100MA TCM1210R-4SM
L1 90-OHM-100MA TCM1210R-4SM
LCM_MIPI_DATA0_P NET_PHYSICAL_TYPE=MIPI NET_SPACING_TYPE=MIPI DIFFERENTIAL_PAIR=LCM_MIPI_DATA0
LCM_MIPI_DATA0_N NET_PHYSICAL_TYPE=MIPI NET_SPACING_TYPE=MIPI DIFFERENTIAL_PAIR=LCM_MIPI_DATA0
LCM_MIPI_DATA1_P NET_PHYSICAL_TYPE=MIPI NET_SPACING_TYPE=MIPI DIFFERENTIAL_PAIR=LCM_MIPI_DATA1
LCM_MIPI_DATA1_N NET_PHYSICAL_TYPE=MIPI NET_SPACING_TYPE=MIPI DIFFERENTIAL_PAIR=LCM_MIPI_DATA1
LCM_MIPI_CLK_P NET_PHYSICAL_TYPE=MIPI NET_SPACING_TYPE=MIPI DIFFERENTIAL_PAIR=LCM_MIPI_CLK
LCM_MIPI_CLK_N NET_PHYSICAL_TYPE=MIPI NET_SPACING_TYPE=MIPI DIFFERENTIAL_PAIR=LCM_MIPI_CLK

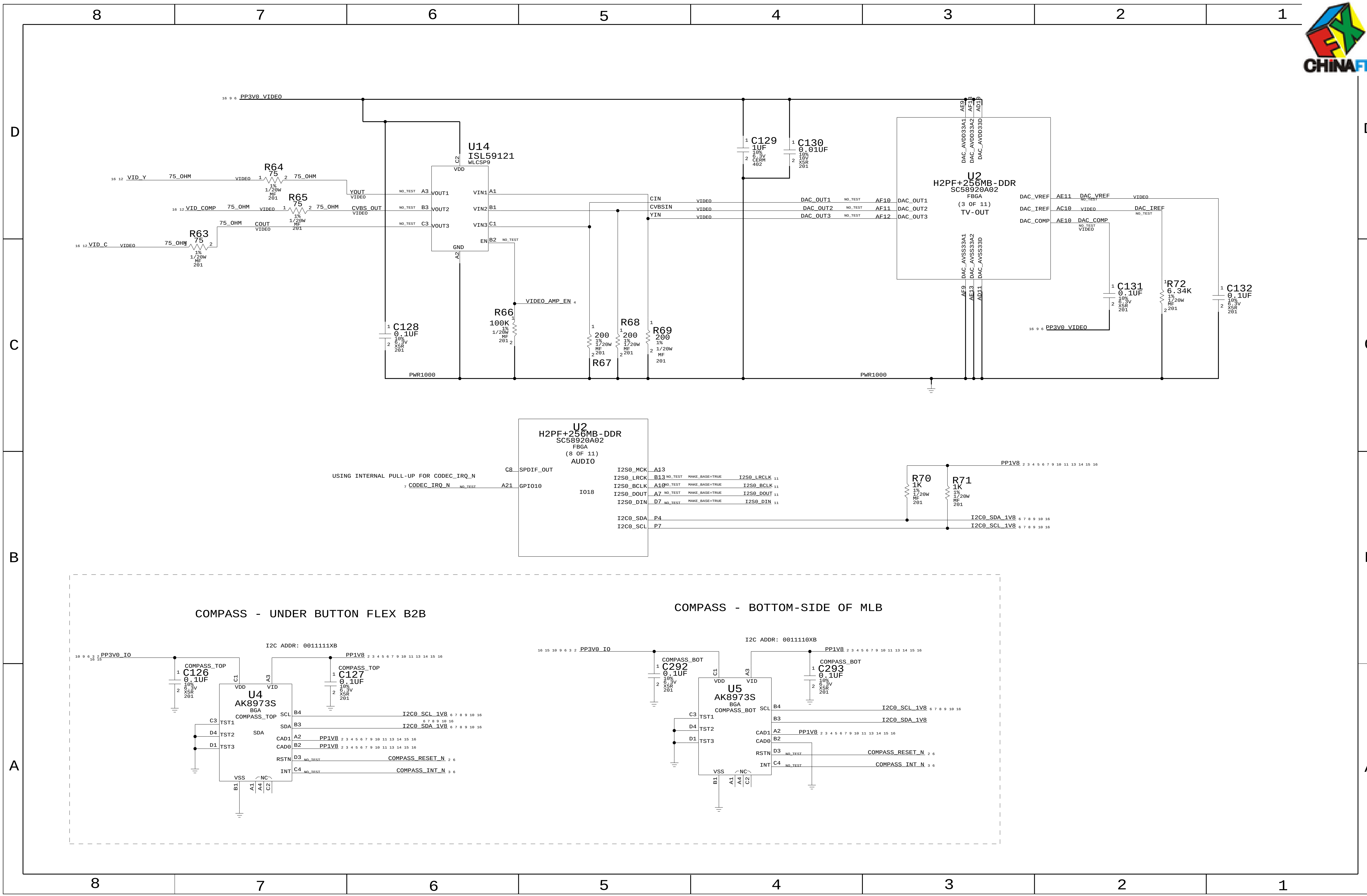
U14
ISL59121
WLCSP9
R64
R65
R63
R66
R67
R68
R69
C128
C129
C130
C131
C132
U2
H2PF+256MB-DDR
SC58920A02
FBGA
(3 OF 11)
TV-OUT
R72
PP3V0_VIDEO
VID_Y
VID_COMP
VID_C
VIDEO_AMP_EN
PWR1000
U2
H2PF+256MB-DDR
SC58920A02
FBGA
(8 OF 11)
AUDIO
USING INTERNAL PULL-UP FOR CODEC_IRQ_N
CODEC_IRQ_N
I2S0_LRCLK
I2S0_BCLK
I2S0_DOUT
I2S0_DIN
I2C0_SDA_1V8
I2C0_SCL_1V8
R70
R71
PP1V8
COMPASS - UNDER BUTTON FLEX B2B
I2C ADDR: 0011111XB
U4
AK8973S
C126
C127
PP3V0_IO
COMPASS_RESET_N
COMPASS_INT_N
COMPASS - BOTTOM-SIDE OF MLB
I2C ADDR: 0011110XB
U5
AK8973S
C292
C293

L61 AUDIO INTERFACE

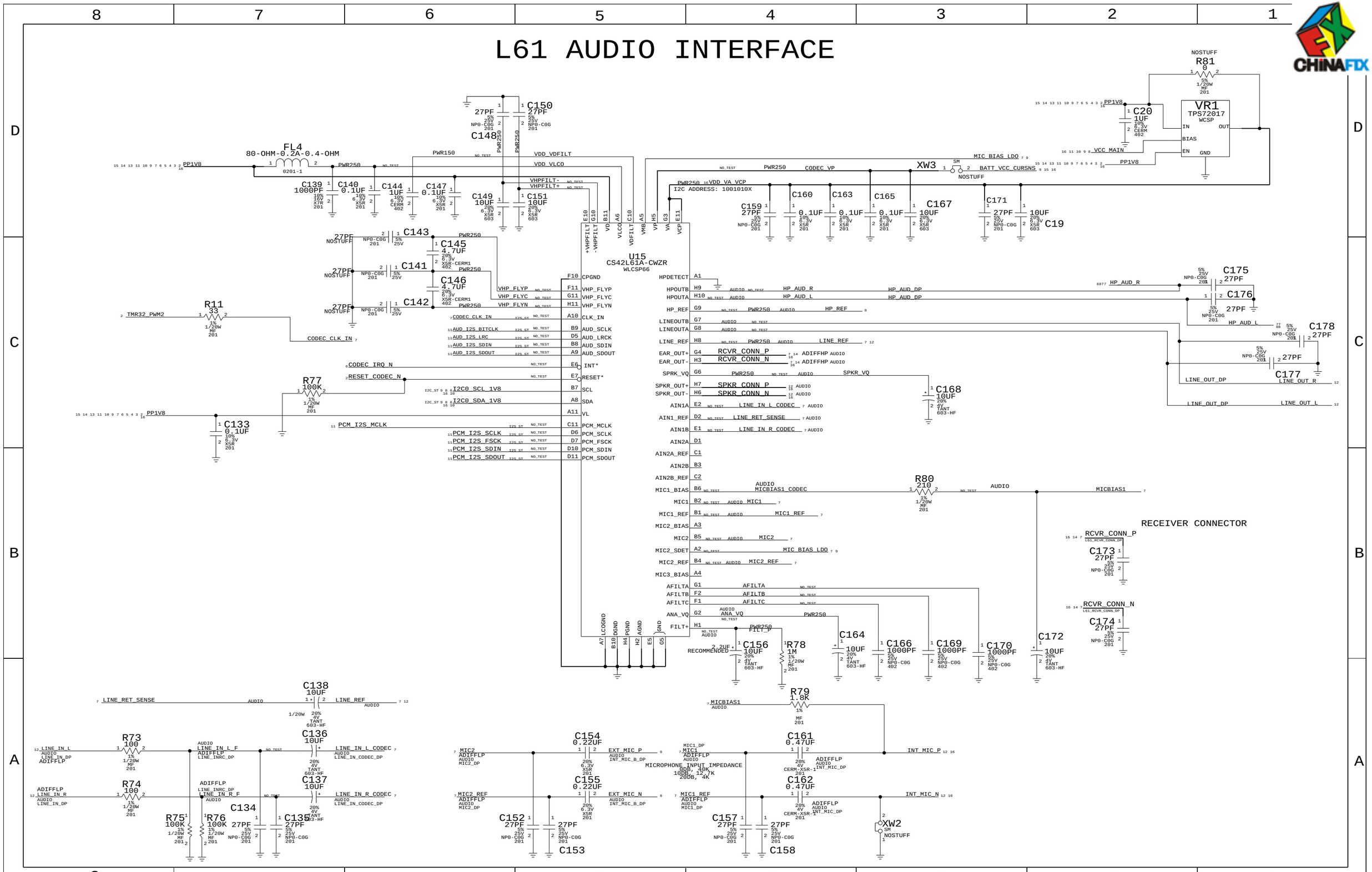

L61 HEADPHONE CONNECTOR

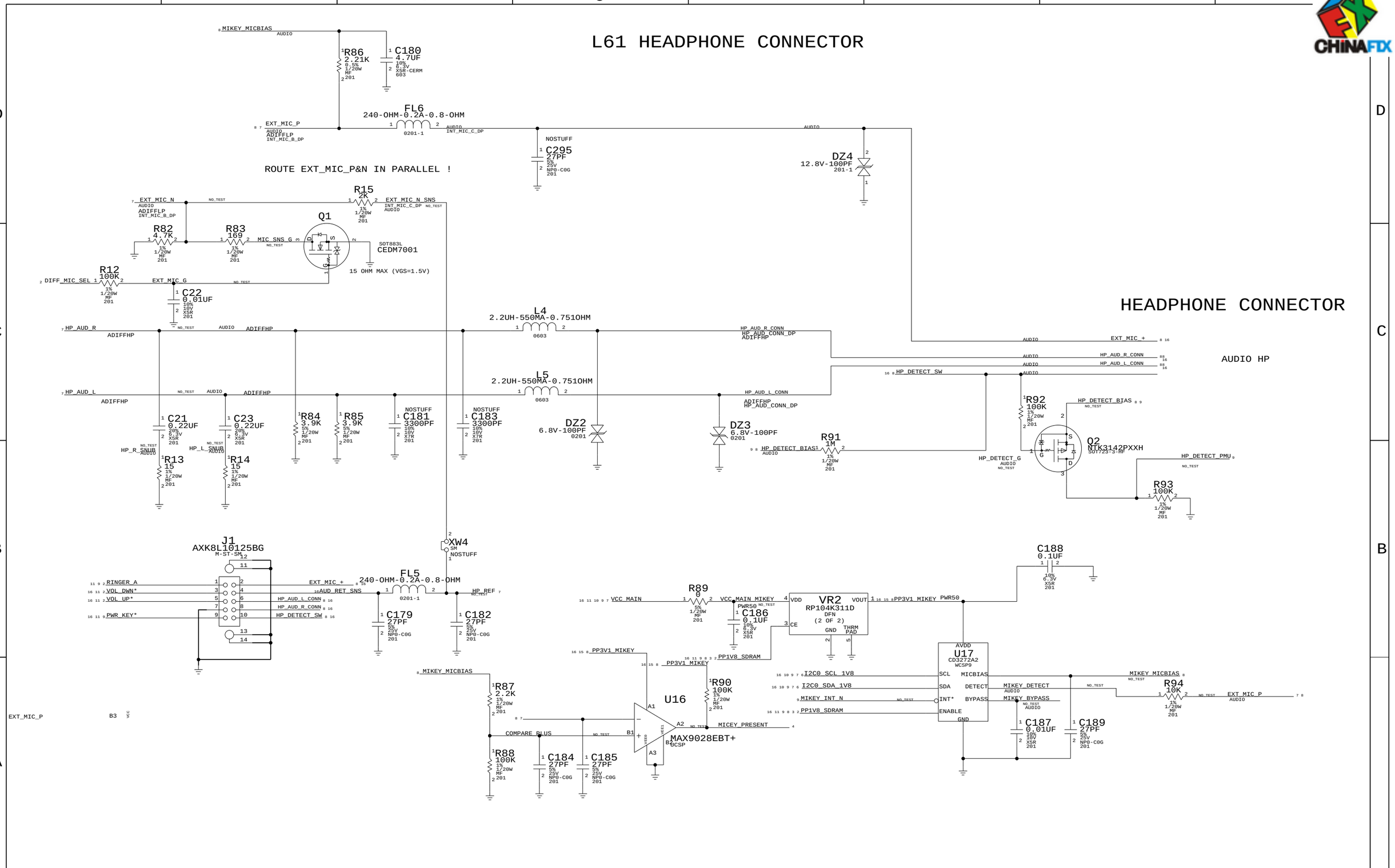

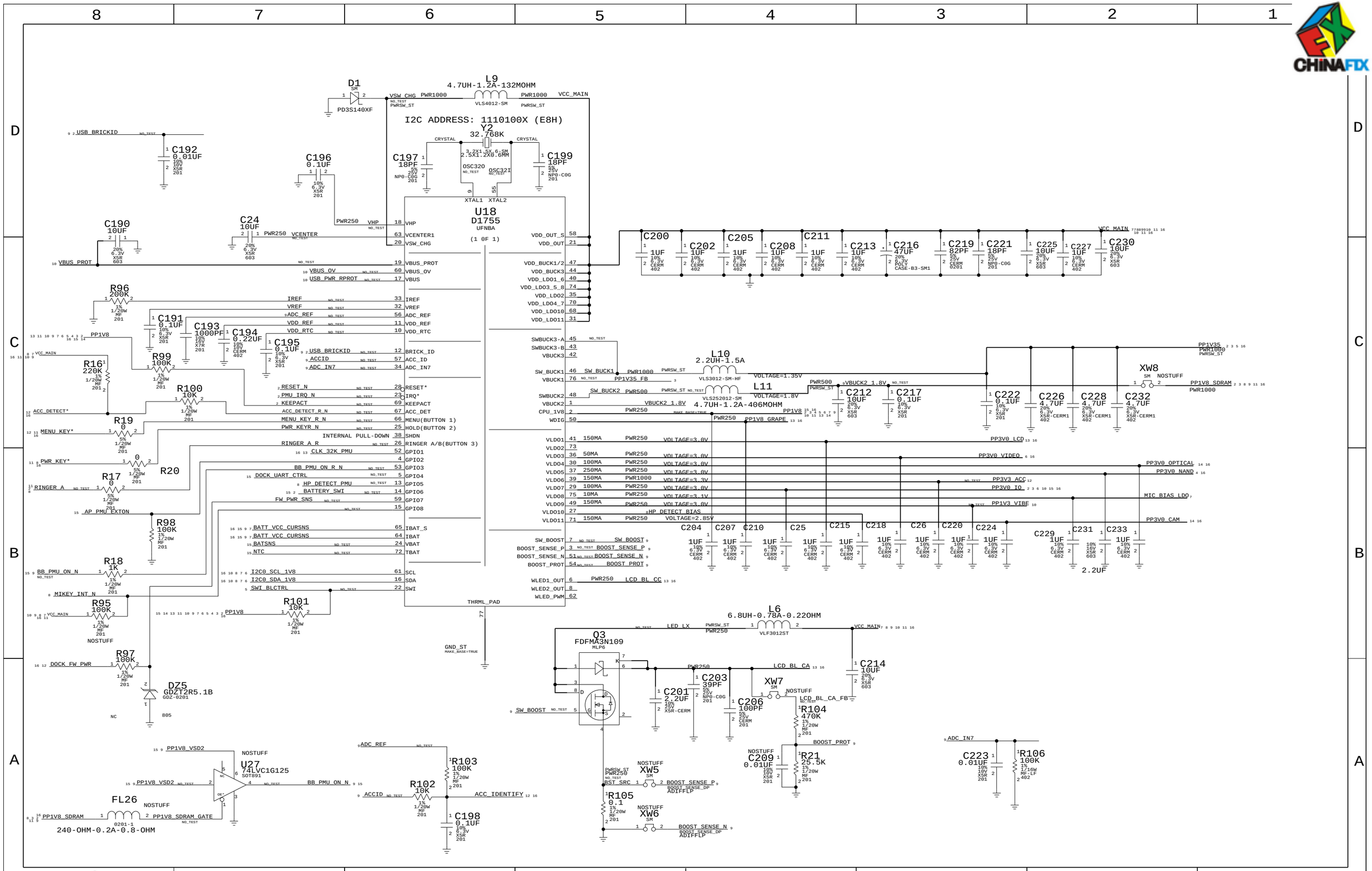
U18
D1755
UFNBA
(1 OF 1)
I2C ADDRESS: 1110100X (E8H)
L9
4.7UH-1.2A-132MOHM
VLS4012-SM
D1
PD3S140XF
Y2
32.768K
3.2X1.5X.6-SM
2.5X1.2X0.6MM
C197
18PF
C199
18PF
C196
0.1UF
C190
10UF
C24
10UF
C192
0.01UF
VCC_MAIN
VBUS_PROT
VBUS_OV
USB_PWR_RPROT
USB_BRICKID
R96
200K
C191
0.1UF
C193
1000PF
C194
0.22UF
C195
0.1UF
R16
220K
R99
100K
R100
10K
R19
0
R20
R17
0
R98
100K
R18
1K
R95
100K
NOSTUFF
R97
100K
DZ5
GDZT2R5.1B
GDZ-0201
NC
805
PP1V8
ACC_DETECT*
MENU_KEY*
PWR_KEY*
RINGER_A
AP_PMU_EXTON
MIKEY_INT_N
DOCK_FW_PWR
INTERNAL PULL-DOWN
THRML_PAD
GND_ST
MAKE_BASE=TRUE
C200
1UF
C202
1UF
C205
1UF
C208
1UF
C211
1UF
C213
1UF
C216
47UF
C219
82PF
C221
18PF
C225
10UF
C227
1UF
C230
10UF
L10
2.2UH-1.5A
VLS3012-SM-HF
L11
VLS252012-SM
4.7UH-1.2A-406MOHM
VOLTAGE=1.35V
VOLTAGE=1.8V
C212
10UF
C217
0.1UF
C222
0.1UF
C226
4.7UF
C228
4.7UF
C232
4.7UF
XW8
NOSTUFF
PP1V8_SDRAM
PP1V35
PP3V0_LCD
PP3V0_VIDEO
PP3V0_OPTICAL
PP3V0_NAND
PP3V3_ACC
PP3V0_IO
MIC_BIAS_LDO
PP1V3_VIBE
PP3V0_CAM
C204
C207
C210
C25
C215
C218
C26
C220
C224
C229
C231
C233
2.2UF
L6
6.8UH-0.78A-0.220HM
VLF3012ST
Q3
FDFMA3N109
MLP6
C201
2.2UF
C203
39PF
C206
100PF
C214
10UF
XW7
NOSTUFF
R104
470K
R21
25.5K
C209
0.01UF
XW5
XW6
ADIFFLP
R105
0.1
R103
100K
R102
10K
C198
0.1UF
U27
74LVC1G125
SOT891
FL26
NOSTUFF
0201-1
240-OHM-0.2A-0.8-OHM
C223
0.01UF
R106
100K
ACC_IDENTIFY
BB_PMU_ON_N
ACCID
ADC_IN7

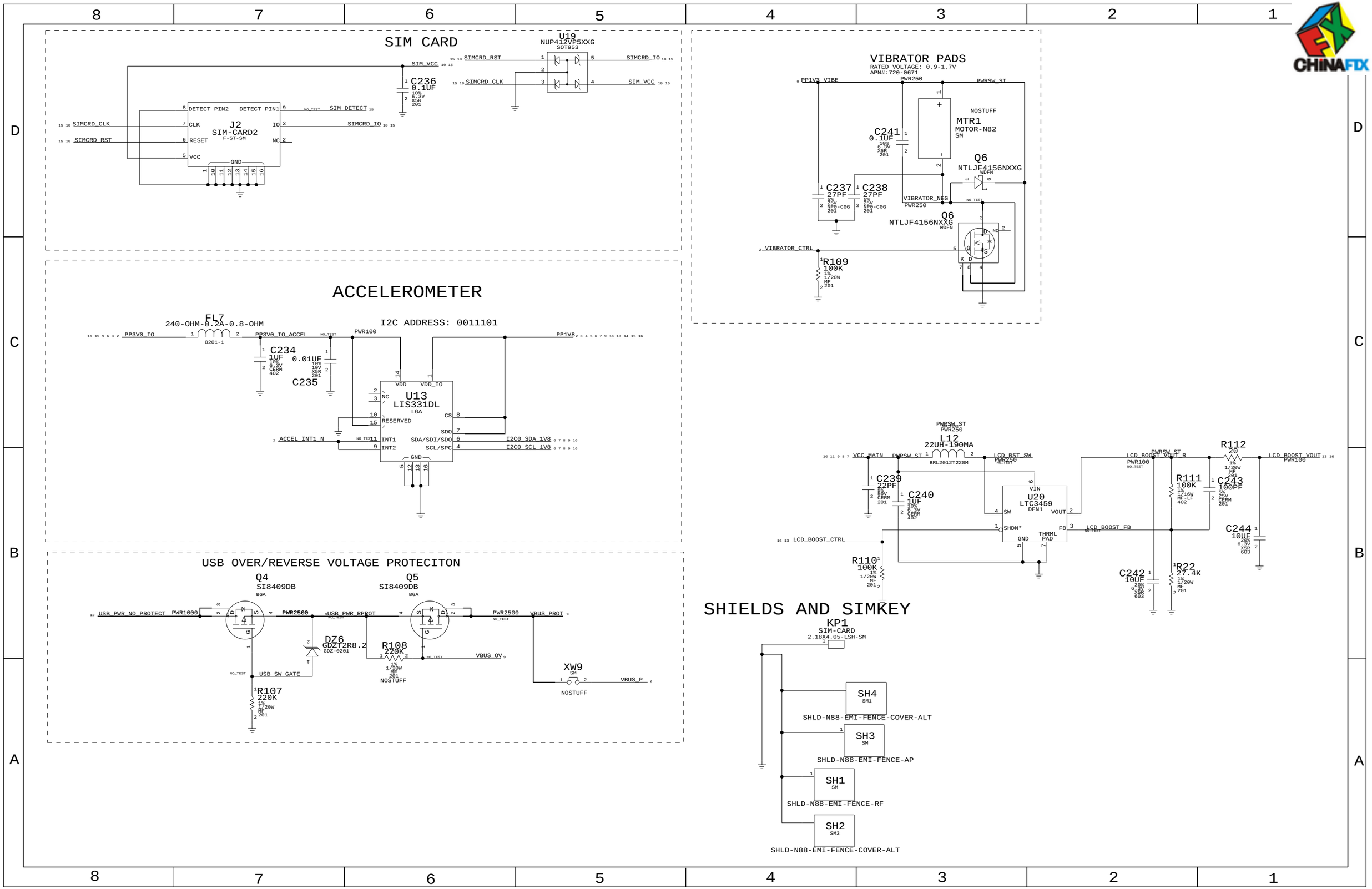
SIM CARD
U19
NUP412VP5XXG
SOT953
SIM_VCC
SIMCRD_RST
SIMCRD_CLK
SIMCRD_IO
C236
0.1UF
10%
6.3V
X5R
201
DETECT PIN2
DETECT PIN1
CLK
RESET
VCC
J2
SIM-CARD2
F-ST-SM
SIM_DETECT
GND
VIBRATOR PADS
RATED VOLTAGE: 0.9-1.7V
APN#:720-0671
PP1V3_VIBE
PWR250
PWRSW_ST
NOSTUFF
MTR1
MOTOR-N82
SM
C241
0.1UF
10%
6.3V
X5R
201
Q6
NTLJF4156NXXG
WDFN
C237
27PF
5%
25V
NP0-C0G
201
C238
27PF
5%
25V
NP0-C0G
201
VIBRATOR_NEG
VIBRATOR_CTRL
R109
100K
1%
1/20W
MF
201
ACCELEROMETER
FL7
240-OHM-0.2A-0.8-OHM
0201-1
PP3V0_IO
PP3V0_IO_ACCEL
PWR100
PP1V8
I2C ADDRESS: 0011101
C234
1UF
10%
6.3V
CERM
402
C235
0.01UF
10%
10V
X5R
201
U13
LIS331DL
LGA
VDD
VDD_IO
NC
RESERVED
CS
SDO
SDA/SDI/SDO
SCL/SPC
INT1
INT2
ACCEL_INT1_N
I2C0_SDA_1V8
I2C0_SCL_1V8
GND
USB OVER/REVERSE VOLTAGE PROTECITON
Q4
SI8409DB
BGA
Q5
SI8409DB
BGA
USB_PWR_NO_PROTECT
PWR1000
PWR2500
USB_PWR_RPROT
VBUS_PROT
DZ6
GDZT2R8.2
GDZ-0201
R108
220K
1%
1/20W
MF
201
NOSTUFF
VBUS_OV
USB_SW_GATE
R107
220K
1%
1/20W
MF
201
XW9
SM
NOSTUFF
VBUS_P
PWRSW_ST
PWR250
L12
22UH-190MA
BRL2012T220M
VCC_MAIN
LCD_BST_SW
PWR250
C239
22PF
5%
50V
CERM
201
C240
1UF
10%
6.3V
CERM
402
U20
LTC3459
DFN1
VIN
SW
SHDN*
GND
THRML PAD
VOUT
FB
LCD_BOOST_FB
LCD_BOOST_CTRL
R110
100K
1%
1/20W
MF
201
LCD_BOOST_VOUT_R
PWR100
R111
100K
1%
1/16W
MF-LF
402
C242
10UF
20%
6.3V
X5R
603
R22
27.4K
1%
1/20W
MF
201
R112
20
1%
1/20W
MF
201
C243
100PF
5%
25V
CERM
201
LCD_BOOST_VOUT
C244
10UF
20%
6.3V
X5R
603
SHIELDS AND SIMKEY
KP1
SIM-CARD
2.18X4.05-LSH-SM
SH4
SM1
SHLD-N88-EMI-FENCE-COVER-ALT
SH3
SM
SHLD-N88-EMI-FENCE-AP
SH1
SM
SHLD-N88-EMI-FENCE-RF
SH2
SM3
SHLD-N88-EMI-FENCE-COVER-ALT

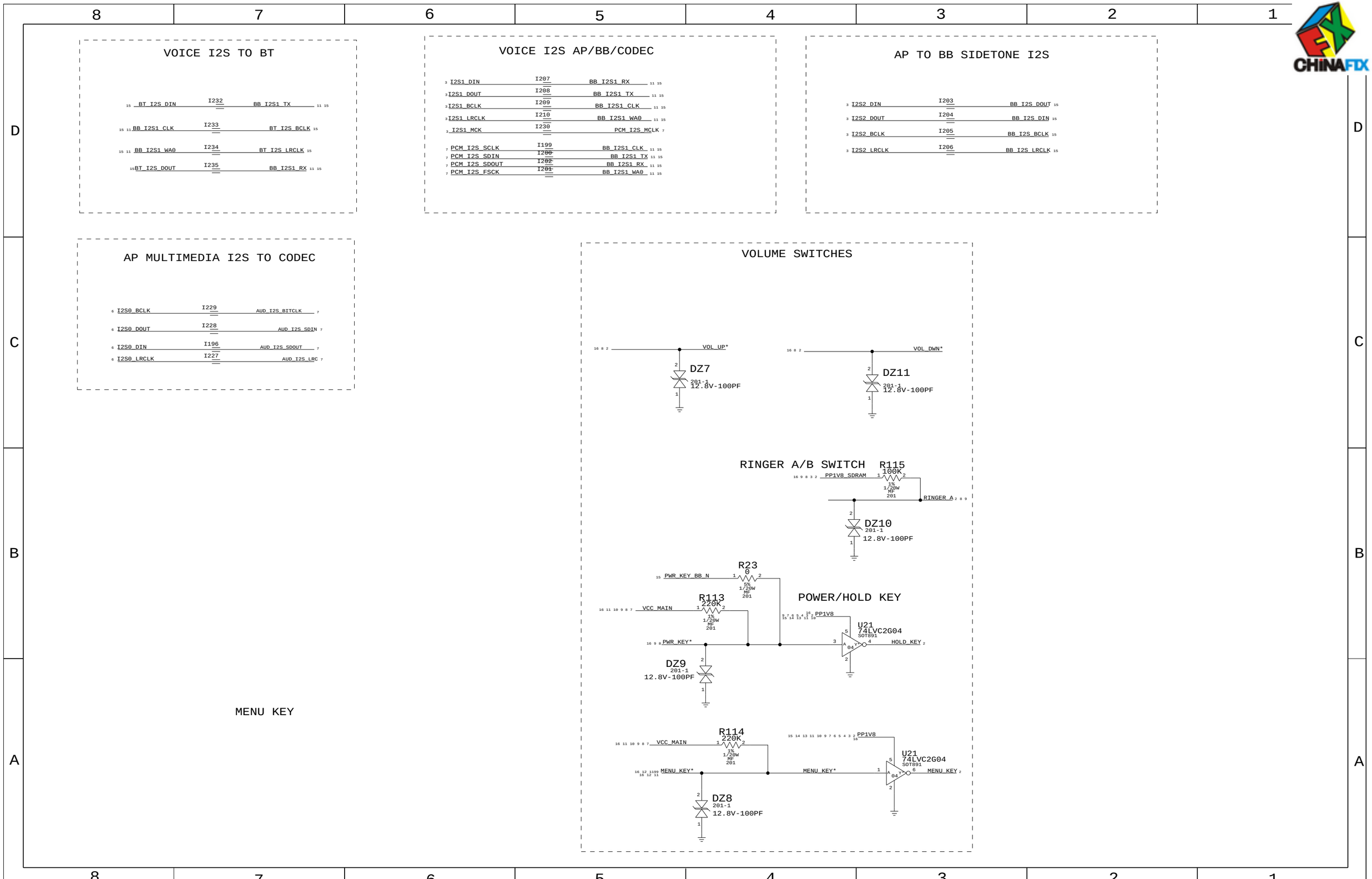
VOICE I2S TO BT
15 BT_I2S_DIN I232 BB_I2S1_TX 11 15
15 11 BB_I2S1_CLK I233 BT_I2S_BCLK 15
15 11 BB_I2S1_WA0 I234 BT_I2S_LRCLK 15
15 BT_I2S_DOUT I235 BB_I2S1_RX 11 15
VOICE I2S AP/BB/CODEC
3 I2S1_DIN I207 BB_I2S1_RX 11 15
3 I2S1_DOUT I208 BB_I2S1_TX 11 15
3 I2S1_BCLK I209 BB_I2S1_CLK 11 15
3 I2S1_LRCLK I210 BB_I2S1_WA0 11 15
3 I2S1_MCK I230 PCM_I2S_MCLK 7
7 PCM_I2S_SCLK I199 BB_I2S1_CLK 11 15
7 PCM_I2S_SDIN I200 BB_I2S1_TX 11 15
7 PCM_I2S_SDOUT I202 BB_I2S1_RX 11 15
7 PCM_I2S_FSCK I201 BB_I2S1_WA0 11 15
AP TO BB SIDETONE I2S
3 I2S2_DIN I203 BB_I2S_DOUT 15
3 I2S2_DOUT I204 BB_I2S_DIN 15
3 I2S2_BCLK I205 BB_I2S_BCLK 15
3 I2S2_LRCLK I206 BB_I2S_LRCLK 15
AP MULTIMEDIA I2S TO CODEC
6 I2S0_BCLK I229 AUD_I2S_BITCLK 7
6 I2S0_DOUT I228 AUD_I2S_SDIN 7
6 I2S0_DIN I196 AUD_I2S_SDOUT 7
6 I2S0_LRCLK I227 AUD_I2S_LRC 7
VOLUME SWITCHES
16 8 2 VOL_UP*
DZ7
201-1
12.8V-100PF
16 8 2 VOL_DWN*
DZ11
201-1
12.8V-100PF
RINGER A/B SWITCH
R115
100K
1%
1/20W
MF
201
16 9 8 3 2 PP1V8_SDRAM
RINGER_A 2 8 9
DZ10
201-1
12.8V-100PF
POWER/HOLD KEY
R23
0
5%
1/20W
MF
201
15 PWR_KEY_BB_N
R113
220K
1%
1/20W
MF
201
16 11 10 9 8 7 VCC_MAIN
9 7 6 5 4 3 2 16 PP1V8
16 14 13 11 10
U21
74LVC2G04
SOT891
16 9 8 PWR_KEY*
HOLD_KEY 2
DZ9
201-1
12.8V-100PF
MENU KEY
R114
220K
1%
1/20W
MF
201
16 11 10 9 8 7 VCC_MAIN
15 14 13 11 10 9 7 6 5 4 3 2 PP1V8
16
U21
74LVC2G04
SOT891
16 12 1199 16 12 11 MENU_KEY*
MENU_KEY*
MENU_KEY 2
DZ8
201-1
12.8V-100PF

DOCK CONNECTOR

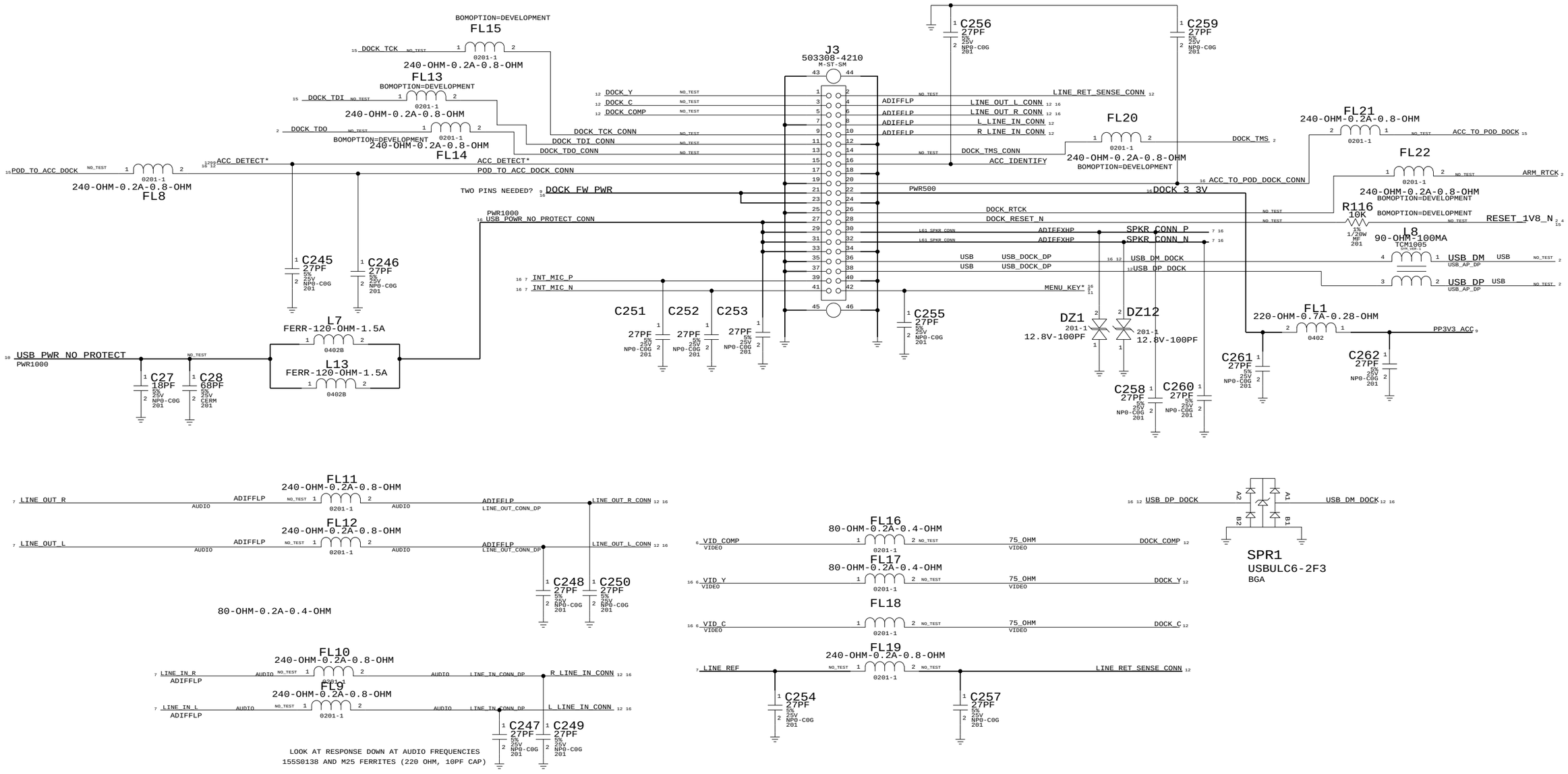

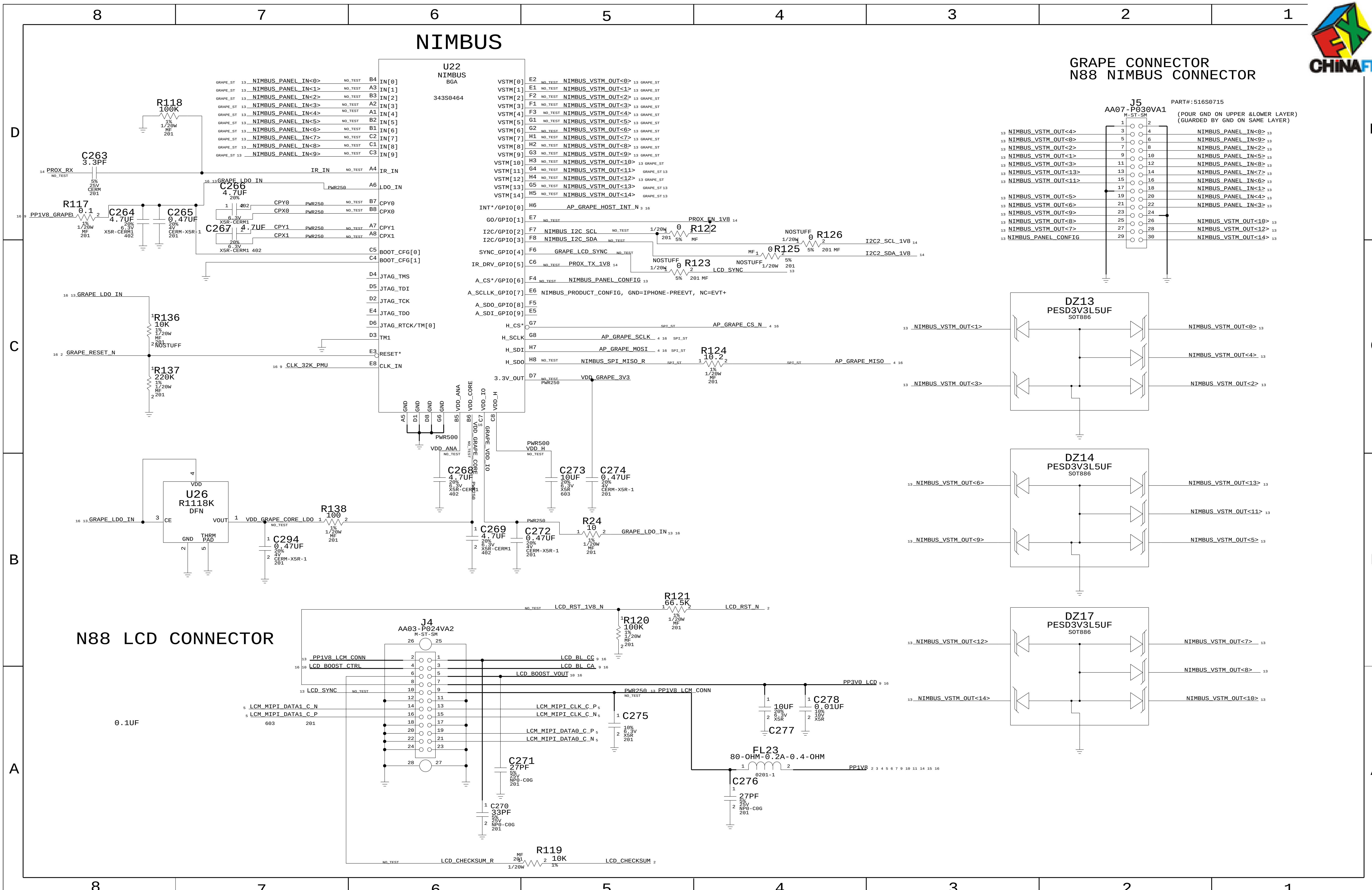
NIMBUS
U22
NIMBUS
BGA
343S0464
NIMBUS_PANEL_IN<0>
IN[0]
IN[1]
IN[2]
IN[3]
IN[4]
IN[5]
IN[6]
IN[7]
IN[8]
IN[9]
IR_IN
LDO_IN
CPY0
CPX0
CPY1
CPX1
BOOT_CFG[0]
BOOT_CFG[1]
JTAG_TMS
JTAG_TDI
JTAG_TCK
JTAG_TDO
JTAG_RTCK/TM[0]
TM1
RESET*
CLK_IN
VSTM[0]
VSTM[14]
NIMBUS_VSTM_OUT<0>
INT*/GPIO[0]
GO/GPIO[1]
I2C/GPIO[2]
I2C/GPIO[3]
SYNC_GPIO[4]
IR_DRV_GPIO[5]
A_CS*/GPIO[6]
A_SCLLK_GPIO[7]
A_SDO_GPIO[8]
A_SDI_GPIO[9]
H_CS*
H_SCLK
H_SDI
H_SDO
3.3V_OUT
AP_GRAPE_HOST_INT_N
PROX_EN_1V8
NIMBUS_I2C_SCL
NIMBUS_I2C_SDA
GRAPE_LCD_SYNC
PROX_TX_1V8
NIMBUS_PANEL_CONFIG
NIMBUS_PRODUCT_CONFIG, GND=IPHONE-PREEVT, NC=EVT+
AP_GRAPE_CS_N
AP_GRAPE_SCLK
AP_GRAPE_MOSI
NIMBUS_SPI_MISO_R
AP_GRAPE_MISO
VDD_GRAPE_3V3
I2C2_SCL_1V8
I2C2_SDA_1V8
LCD_SYNC
R118 100K
C263 3.3PF
PROX_RX
R117 0.1
PP1V8_GRAPE
C264 4.7UF
C265 0.47UF
C266 4.7UF
C267 4.7UF
GRAPE_LDO_IN
R136 10K
NOSTUFF
GRAPE_RESET_N
R137 220K
CLK_32K_PMU
R122 0
R126 0
R125 0
R123 0
R124 10.2
VDD_ANA
VDD_CORE
VDD_IO
VDD_H
VDD_GRAPE_CORE
GRAPE_VDD_IO
C268 4.7UF
C273 10UF
C274 0.47UF
U26
R1118K
DFN
VDD
CE
VOUT
GND
THRM PAD
VDD_GRAPE_CORE_LDO
R138 100
C294 0.47UF
C269 4.7UF
C272 0.47UF
R24 10
GRAPE CONNECTOR
N88 NIMBUS CONNECTOR
J5
AA07-P030VA1
M-ST-SM
PART#:516S0715
(POUR GND ON UPPER &LOWER LAYER)
(GUARDED BY GND ON SAME LAYER)
DZ13
PESD3V3L5UF
SOT886
DZ14
PESD3V3L5UF
SOT886
DZ17
PESD3V3L5UF
SOT886
N88 LCD CONNECTOR
J4
AA03-P024VA2
M-ST-SM
PP1V8_LCM_CONN
LCD_BOOST_CTRL
LCD_SYNC
LCM_MIPI_DATA1_C_N
LCM_MIPI_DATA1_C_P
LCD_BL_CC
LCD_BL_CA
LCD_BOOST_VOUT
LCM_MIPI_CLK_C_P
LCM_MIPI_CLK_C_N
LCM_MIPI_DATA0_C_P
LCM_MIPI_DATA0_C_N
LCD_RST_1V8_N
R121 66.5K
LCD_RST_N
R120 100K
PP3V0_LCD
C275
C277 10UF
C278 0.01UF
FL23
80-OHM-0.2A-0.4-OHM
PP1V8
C276 27PF
C271 27PF
C270 33PF
R119 10K
LCD_CHECKSUM_R
LCD_CHECKSUM
0.1UF

CAMERA INTERFACE

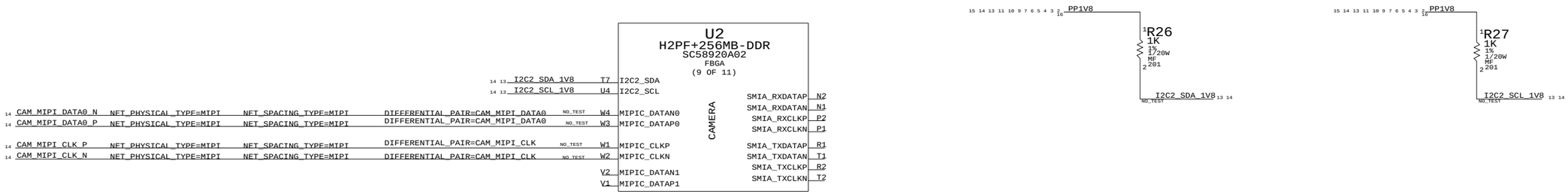

CAMERA CONNECTOR

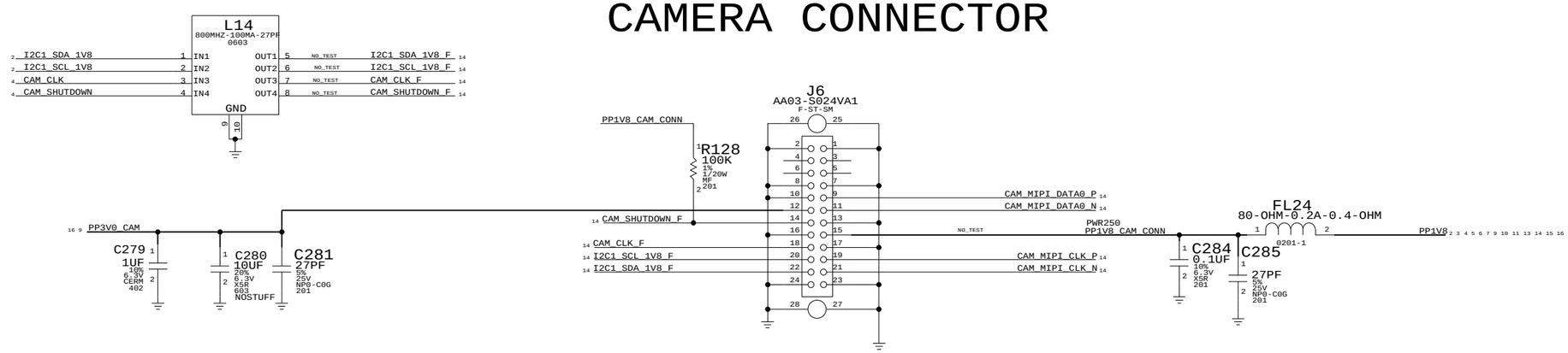

ALS/PROX

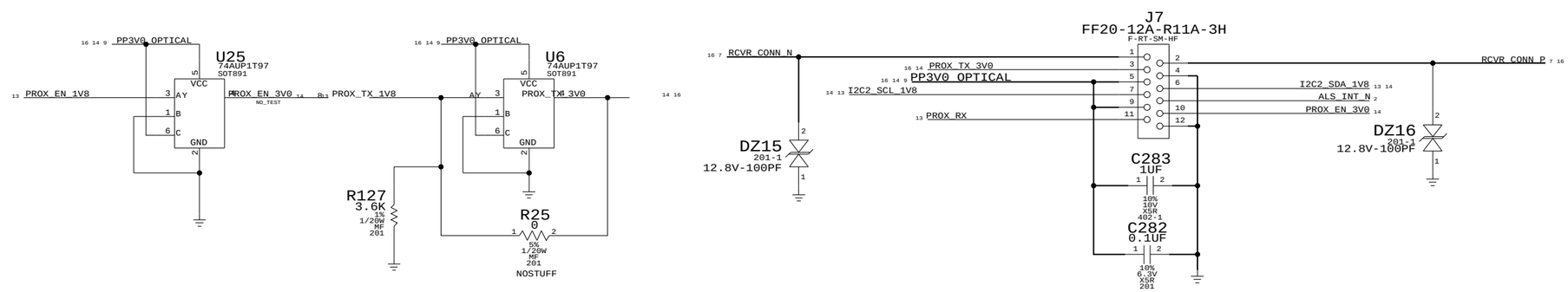

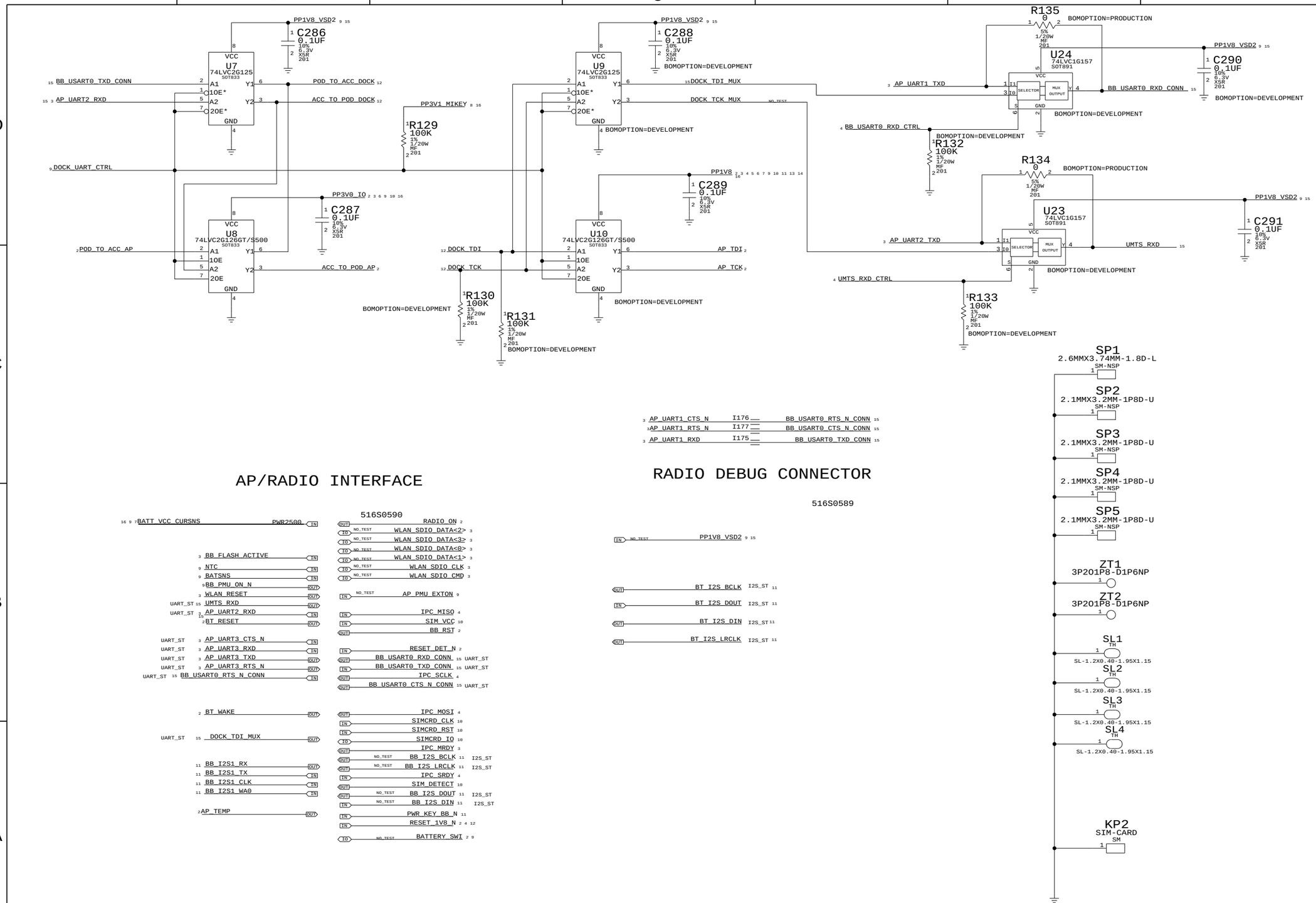
U7 74LVC2G125 SOT833
U8 74LVC2G126GT/S500 SOT833
U9 74LVC2G125 SOT833
U10 74LVC2G126GT/S500 SOT833
U24 74LVC1G157 SOT891
U23 74LVC1G157 SOT891
C286 0.1UF
C287 0.1UF
C288 0.1UF
C289 0.1UF
C290 0.1UF
C291 0.1UF
R129 100K
R130 100K
R131 100K
R132 100K
R133 100K
R134 0
R135 0
PP1V8_VSD2
PP3V1_MIKEY
PP3V0_IO
BB_USART0_TXD_CONN
AP_UART2_RXD
POD_TO_ACC_DOCK
ACC_TO_POD_DOCK
DOCK_UART_CTRL
POD_TO_ACC_AP
ACC_TO_POD_AP
DOCK_TDI
DOCK_TCK
DOCK_TDI_MUX
DOCK_TCK_MUX
AP_TDI
AP_TCK
AP_UART1_TXD
BB_USART0_RXD_CONN
BB_USART0_RXD_CTRL
AP_UART2_TXD
UMTS_RXD
UMTS_RXD_CTRL
BOMOPTION=PRODUCTION
BOMOPTION=DEVELOPMENT
SP1 2.6MMX3.74MM-1.8D-L SM-NSP
SP2 2.1MMX3.2MM-1P8D-U SM-NSP
SP3 2.1MMX3.2MM-1P8D-U SM-NSP
SP4 2.1MMX3.2MM-1P8D-U SM-NSP
SP5 2.1MMX3.2MM-1P8D-U SM-NSP
ZT1 3P2O1P8-D1P6NP
ZT2 3P2O1P8-D1P6NP
SL1 SL-1.2X0.40-1.95X1.15
SL2 SL-1.2X0.40-1.95X1.15
SL3 SL-1.2X0.40-1.95X1.15
SL4 SL-1.2X0.40-1.95X1.15
KP2 SIM-CARD SM
AP_UART1_CTS_N I176 BB_USART0_RTS_N_CONN
AP_UART1_RTS_N I177 BB_USART0_CTS_N_CONN
AP_UART1_RXD I175 BB_USART0_TXD_CONN
AP/RADIO INTERFACE
RADIO DEBUG CONNECTOR
516S0589
516S0590
BATT_VCC_CURSNS PWR2500
BB_FLASH_ACTIVE
NTC
BATSNS
BB_PMU_ON_N
WLAN_RESET
UMTS_RXD
AP_UART2_RXD
BT_RESET
AP_UART3_CTS_N
AP_UART3_RXD
AP_UART3_TXD
AP_UART3_RTS_N
BB_USART0_RTS_N_CONN
BT_WAKE
DOCK_TDI_MUX
BB_I2S1_RX
BB_I2S1_TX
BB_I2S1_CLK
BB_I2S1_WA0
AP_TEMP
RADIO_ON
WLAN_SDIO_DATA<2>
WLAN_SDIO_DATA<3>
WLAN_SDIO_DATA<0>
WLAN_SDIO_DATA<1>
WLAN_SDIO_CLK
WLAN_SDIO_CMD
AP_PMU_EXTON
IPC_MISO
SIM_VCC
BB_RST
RESET_DET_N
BB_USART0_RXD_CONN
BB_USART0_TXD_CONN
IPC_SCLK
BB_USART0_CTS_N_CONN
IPC_MOSI
SIMCRD_CLK
SIMCRD_RST
SIMCRD_IO
IPC_MRDY
BB_I2S_BCLK
BB_I2S_LRCLK
IPC_SRDY
SIM_DETECT
BB_I2S_DOUT
BB_I2S_DIN
PWR_KEY_BB_N
RESET_1V8_N
BATTERY_SWI
PP1V8_VSD2
BT_I2S_BCLK
BT_I2S_DOUT
BT_I2S_DIN
BT_I2S_LRCLK

TEST POINTS

GPIO

FL25

2	IN	NO_TEST	FORCE_DFU	0201-1	FORCE_DFU_TP	TP12 A NOSTUFF TP-P6
					FUNC_TEST	

240-OHM-0.2A-0.8-OHM

11 9 8	IN	FUNC_TEST	PWR_KEY*	TP14 A NOSTUFF TP-P6
12 11 9	IN	FUNC_TEST	MENU_KEY*	TP15 A NOSTUFF TP-P6
11 8 2	IN	FUNC_TEST	VOL_UP*	TP17 A NOSTUFF TP-P6
11 8 2	IN	FUNC_TEST	VOL_DWN*	TP18 A NOSTUFF TP-P6

AUDIO

SPEAKER

12 7	IN	FUNC_TEST	SPKR_CONN_P	TP2 A NOSTUFF TP-P6
12 7	IN	FUNC_TEST	SPKR_CONN_N	TP3 A NOSTUFF TP-P6

RECEIVER

14 7	IN	FUNC_TEST	RCVR_CONN_P	TP4 A NOSTUFF TP-P6
14 7	IN	FUNC_TEST	RCVR_CONN_N	TP5 A NOSTUFF TP-P6

MIC

12 7	IN	FUNC_TEST	INT_MIC_P	TP8 A NOSTUFF TP-P6
12 7	IN	FUNC_TEST	INT_MIC_N	TP9 A NOSTUFF TP-P6

LINE IN

12	IN	FUNC_TEST	L_LINE_IN_CONN	TP6 A NOSTUFF TP-P6
12	IN	FUNC_TEST	R_LINE_IN_CONN	TP7 A NOSTUFF TP-P6

TP32

LINE OUT

12	IN	FUNC_TEST	LINE_OUT_L_CONN	TP10 A NOSTUFF TP-P6
12	IN	FUNC_TEST	LINE_OUT_R_CONN	TP11 A NOSTUFF TP-P6

NAND

4	IN	FUNC_TEST	F1AD<5>	TP20 A NOSTUFF TP-P6
4	IN	FUNC_TEST	F1RE_N	TP21 A NOSTUFF TP-P6
4	IN	FUNC_TEST	F1WE_N	TP22 A NOSTUFF TP-P6

CLOCKS

13 9	IN	NO_TEST	CLK_32K_PMU	TP55 A NOSTUFF TP-P6

ACCESSORY DETECT

12 9	IN	FUNC_TEST	ACC_DETECT*	TP27 A NOSTUFF TP-P6
12 9	IN	FUNC_TEST	ACC_IDENTIFY	TP28 A NOSTUFF TP-P6

I2C PINS

10 9 8 7 6	IN	FUNC_TEST	I2C0_SCL_1V8	TP29 A NOSTUFF TP-P6
10 9 8 7 6	IN	FUNC_TEST	I2C0_SDA_1V8	TP36 A NOSTUFF TP-P6

VIDEO

12 6	IN	FUNC_TEST	VID_C	TP37 A NOSTUFF TP-P6
12 6	IN	FUNC_TEST	VID_Y	TP38 A NOSTUFF TP-P6
12 6	IN	FUNC_TEST	VID_COMP	TP39 A NOSTUFF TP-P6

HEADPHONE

8	IN	FUNC_TEST	EXT_MIC_+	TP30 A NOSTUFF TP-P6
8	IN	FUNC_TEST	AUD_RET_SNS	TP31 A NOSTUFF TP-P6
8	IN	FUNC_TEST		1 A NOSTUFF TP-P6
8	IN	FUNC_TEST	HP_AUD_L_CONN	TP33 A NOSTUFF TP-P6
8	IN	FUNC_TEST	HP_DETECT_SW	TP34 A NOSTUFF TP-P6
				TP35 A NOSTUFF TP-P6

UART

12	IN	FUNC_TEST	POD_TO_ACC_DOCK_CONN	TP44 A NOSTUFF TP-P6
12	IN	FUNC_TEST	ACC_TO_POD_DOCK_CONN	TP45 A NOSTUFF TP-P6

USB

12	IN	FUNC_TEST	USB_DP_DOCK	TP46 A NOSTUFF TP-P6
12	IN	FUNC_TEST	USB_DM_DOCK	TP47 A NOSTUFF TP-P6

NIMBUS

13 4	IN	AP_GRAPE_MOSI	FUNC_TEST	TP48 A NOSTUFF TP-P6
13 4	IN	AP_GRAPE_CS_N	FUNC_TEST	TP49 A NOSTUFF TP-P6
13 4	IN	AP_GRAPE_SCLK	FUNC_TEST	TP50 A NOSTUFF TP-P6
13 4	IN	AP_GRAPE_MISO	FUNC_TEST	TP51 A NOSTUFF TP-P6
13 2	IN	GRAPE_RESET_N	FUNC_TEST	TP52 A NOSTUFF TP-P6
14	IN	FUNC_TEST	PROX_TX_3V0	TP54 A NOSTUFF TP-P6
13 3	IN	AP_GRAPE_HOST_INT_N	FUNC_TEST	TP53 A NOSTUFF TP-P6

5 3	IN	A1_GND	FUNC_TEST	TP40 A NOSTUFF TP-P6
4 3	IN	AF1_GND	FUNC_TEST	TP41 A NOSTUFF TP-P6
4 3	IN	A24_GND	FUNC_TEST	TP42 A NOSTUFF TP-P6
4 3	IN	AF24_GND	FUNC_TEST	TP43 A NOSTUFF TP-P6

POWER GND

			FUNC_TEST	TP59 A NOSTUFF TP-1P0-TOP
				TP60 A NOSTUFF TP-1P0-TOP

SIGNAL GND

				TP61 A NOSTUFF TP-1P0-TOP
				TP62 A NOSTUFF TP-1P0-TOP

POWER

11 10 9 8 7	IN	FUNC_TEST	VCC_MAIN	TP1 A NOSTUFF TP-1P0-TOP
12 9	IN	FUNC_TEST	DOCK_FW_PWR	TP64 A NOSTUFF TP-P6
12	IN	FUNC_TEST	USB_POWR_NO_PROTECT_CONN	TP65 A NOSTUFF TP-1P0-TOP
15 9 7	IN	FUNC_TEST	BATT_VCC_CURSNS	TP66 A NOSTUFF TP-1P0-TOP
2	IN	FUNC_TEST	PP1V2_PLL	TP67 A NOSTUFF TP-P6
13	IN	FUNC_TEST	GRAPE_VDD_IO	TP68 A NOSTUFF TP-P6
13	IN	FUNC_TEST	GRAPE_LDO_IN	TP73 A NOSTUFF TP-P6
13 9	IN	FUNC_TEST	PP1V8_GRAPE	TP26 A NOSTUFF TP-P6
9 5 3 2	IN	FUNC_TEST	PP1V35	TP13 A NOSTUFF TP-P6
11 9 8 3 2	IN	FUNC_TEST	PP1V8_SDRAM	TP75 A NOSTUFF TP-P6
15 14 13 11 10 9 7 6 5 4 3 2	IN	FUNC_TEST	PP1V8	TP76 A NOSTUFF TP-P6
12	IN	FUNC_TEST	DOCK_3_3V	TP77 A NOSTUFF TP-P6
15 10 9 6 3 2	IN	FUNC_TEST	PP3V0_IO	TP78 A NOSTUFF TP-P6
9 6	IN	FUNC_TEST	PP3V0_VIDEO	TP79 A NOSTUFF TP-P6
13 9	IN	FUNC_TEST	PP3V0_LCD	TP80 A NOSTUFF TP-P6
7	IN	FUNC_TEST	VDD_VA_VCP	TP81 A NOSTUFF TP-P6 RESERVED FOR OUTPUT OF LDO
9 4	IN	FUNC_TEST	PP3V0_NAND	TP82 A NOSTUFF TP-P6
14 9	IN	FUNC_TEST	PP3V0_OPTICAL	TP83 A NOSTUFF TP-P6
15 8	IN	FUNC_TEST	PP3V1_MIKEY	TP84 A NOSTUFF TP-P6
14 9	IN	FUNC_TEST	PP3V0_CAM	TP85 A NOSTUFF TP-P6
13 9	IN	FUNC_TEST	LCD_BL_CC	TP89 A NOSTUFF TP-P6
13 9	IN	FUNC_TEST	LCD_BL_CA	TP70 A NOSTUFF TP-P6
13 10	IN	FUNC_TEST	LCD_BOOST_VOUT	TP88 A NOSTUFF TP-P6
13 10	IN	FUNC_TEST	LCD_BOOST_CTRL	TP71 A NOSTUFF TP-P6

8	7	6	5	4	3	2	1

CHINAFIX

Title: Basenet Report
Design: ap_sub
Date: Feb 8 8:37:44 2008

Base nets and synonyms for ap_sub_lib.AP_SUB(@ap_sub_lib.ap_sub(sch_1))

Base Signal	Synonyms	Location([Zone][dir])
24M_O	24M_O - @ap_sub_lib.AP_SUB	2A6
ACCEL_INT1_N	ACCEL_INT1_N - @ap_sub_lib.AP_SUB	5D5 10B7
	RGB<23..0> - @ap_sub_lib.AP_SUB	5D5
ACCEL_INT2_N	ACCEL_INT2_N - @ap_sub_lib.AP_SUB	5D5 10B7
	RGB<23..0> - @ap_sub_lib.AP_SUB	5D5
ACCID	ACCID - @ap_sub_lib.AP_SUB	9A6 9C7
ACC_DETECT*	ACC_DETECT* - @ap_sub_lib.AP_SUB	9C8 12C7 12C7
ACC_DETECT_R_N	ACC_DETECT_R_N - @ap_sub_lib.AP_SUB	9C7
ACC_IDENTIFY	ACC_IDENTIFY - @ap_sub_lib.AP_SUB	9A5 12C3
ACC_TO_POD_AP	ACC_TO_POD_AP - @ap_sub_lib.AP_SUB	2C7 15C6
ACC_TO_POD_DOCK	ACC_TO_POD_DOCK - @ap_sub_lib.AP_SUB	12C1 15D6
ACC_TO_POD_DOCK_CONN	ACC_TO_POD_DOCK_CONN - @ap_sub_lib.AP_SUB	12C2
ADC_IN7	ADC_IN7 - @ap_sub_lib.AP_SUB	9A3 9C7
ADC_REF	ADC_REF - @ap_sub_lib.AP_SUB	9A6 9C7
AFILTA	AFILTA - @ap_sub_lib.AP_SUB	7B4
AFILTB	AFILTB - @ap_sub_lib.AP_SUB	7B4
AFILTC	AFILTC - @ap_sub_lib.AP_SUB	7B4
AIN2A	AIN2A - @ap_sub_lib.AP_SUB	7B4
AIN2A_REF	AIN2A_REF - @ap_sub_lib.AP_SUB	7B4
AIN2B	AIN2B - @ap_sub_lib.AP_SUB	7B4
AIN2B_REF	AIN2B_REF - @ap_sub_lib.AP_SUB	7B4
ALS_INT_N	ALS_INT_N - @ap_sub_lib.AP_SUB	2B3
ANA_VQ	ANA_VQ - @ap_sub_lib.AP_SUB	7B4
AP_GRAPE_CS_N	AP_GRAPE_CS_N - @ap_sub_lib.AP_SUB	4C1 13C4
	SPI1_CS_N - @ap_sub_lib.AP_SUB	4C2 5B6
AP_GRAPE_HOST_INT_N	AP_GRAPE_HOST_INT_N - @ap_sub_lib.AP_SUB	3C5 13D5
AP_GRAPE_MISO	AP_GRAPE_MISO - @ap_sub_lib.AP_SUB	4C1 13C5
	SPI1_MISO - @ap_sub_lib.AP_SUB	4C2 5B6
	N72_SPI_DO - @ap_sub_lib.AP_SUB	4C1
AP_GRAPE_MOSI	AP_GRAPE_MOSI - @ap_sub_lib.AP_SUB	4C1 13C3
	SPI1_MOSI - @ap_sub_lib.AP_SUB	4C2 5B6
	N72_SPI_DI - @ap_sub_lib.AP_SUB	4C1
AP_GRAPE_SCLK	AP_GRAPE_SCLK - @ap_sub_lib.AP_SUB	4C1 13C5
	SPI1_SCLK - @ap_sub_lib.AP_SUB	4C2 5B6
	N72_SPI_CLK - @ap_sub_lib.AP_SUB	4C1
AP_PMU_EXTON	AP_PMU_EXTON - @ap_sub_lib.AP_SUB	9B8 15B6
AP_TCK	AP_TCK - @ap_sub_lib.AP_SUB	2B8 15C5
AP_TDI	AP_TDI - @ap_sub_lib.AP_SUB	2B8 15C5
AP_UART1_TXD	AP_UART1_TXD - @ap_sub_lib.AP_SUB	3C5 15D4
AP_UART2_RXD	AP_UART2_RXD - @ap_sub_lib.AP_SUB	2C8 15B7 15D8
AP_UART2_RXD_3V0	AP_UART2_RXD_3V0 - @ap_sub_lib.AP_SUB	2B7
AP_UART2_TXD	AP_UART2_TXD - @ap_sub_lib.AP_SUB	2C8 15C4
AP_UART2_TXD_3V0	AP_UART2_TXD_3V0 - @ap_sub_lib.AP_SUB	2B7
ARM_RTCK	ARM_RTCK - @ap_sub_lib.AP_SUB	2B7 12C1
AUD_RET_SNS	AUD_RET_SNS - @ap_sub_lib.AP_SUB	8D2
AV_RET_SENSE	AV_RET_SENSE - @ap_sub_lib.AP_SUB	12A5
BATSNS	BATSNS - @ap_sub_lib.AP_SUB	9B7 15B7
BATT_RADIO	BATT_RADIO - @ap_sub_lib.AP_SUB	15B4
BATT_RADIO_N	BATT_RADIO_N - @ap_sub_lib.AP_SUB	15B8
BATT_RADIO_P	BATT_RADIO_P - @ap_sub_lib.AP_SUB	15B8
BATT_VCC_CURSNS	BATT_VCC_CURSNS - @ap_sub_lib.AP_SUB	9B7 15B8
BB_I2S_BCLK	BB_I2S_BCLK - @ap_sub_lib.AP_SUB	11D2 15A6
	I2S2_BCLK - @ap_sub_lib.AP_SUB	11D4
BB_I2S_DIN	BB_I2S_DIN - @ap_sub_lib.AP_SUB	11D2 15A6
	I2S2_DOUT - @ap_sub_lib.AP_SUB	11D4
BB_I2S_DOUT	BB_I2S_DOUT - @ap_sub_lib.AP_SUB	11D2 15A6
	I2S2_DIN - @ap_sub_lib.AP_SUB	11D4
BB_I2S_LRCLK	BB_I2S_LRCLK - @ap_sub_lib.AP_SUB	11D2 15A6
	I2S2_LRCLK - @ap_sub_lib.AP_SUB	11D4
BB_PMU_ON*	BB_PMU_ON* - @ap_sub_lib.AP_SUB	9B8 9B8 15B7
BB_RST	BB_RST - @ap_sub_lib.AP_SUB	2C3 15B6
BB_USART0_CTS_N_CONN	BB_USART0_CTS_N_CONN - @ap_sub_lib.AP_SUB	15B6 15C4
	AP_UART1_RTS_N - @ap_sub_lib.AP_SUB	3C5 15C5
BB_USART0_RTS_N_CONN	BB_USART0_RTS_N_CONN - @ap_sub_lib.AP_SUB	15B8 15C4
	AP_UART1_CTS_N - @ap_sub_lib.AP_SUB	3C5 15C5
BB_USART0_RXD_CONN	BB_USART0_RXD_CONN - @ap_sub_lib.AP_SUB	15B6 15D2
BB_USART0_RXD_CTRL	BB_USART0_RXD_CTRL - @ap_sub_lib.AP_SUB	5D4 15D4
	RGB<23..0> - @ap_sub_lib.AP_SUB	5D5
BB_USART0_TXD_CONN	BB_USART0_TXD_CONN - @ap_sub_lib.AP_SUB	15B6 15C4 15D8
	AP_UART1_RXD - @ap_sub_lib.AP_SUB	3C5 15C5
BOARD_ID0	BOARD_ID0 - @ap_sub_lib.AP_SUB	5C4 5D5
	RGB<23..0> - @ap_sub_lib.AP_SUB	5D5
BOARD_ID1	BOARD_ID1 - @ap_sub_lib.AP_SUB	5C4 5D5
	RGB<23..0> - @ap_sub_lib.AP_SUB	5D5
BOARD_ID2	BOARD_ID2 - @ap_sub_lib.AP_SUB	5C4 5D5
	RGB<23..0> - @ap_sub_lib.AP_SUB	5D5
BOARD_ID3	BOARD_ID3 - @ap_sub_lib.AP_SUB	5C4 5D5
	RGB<23..0> - @ap_sub_lib.AP_SUB	5D5
BOOST_PROT	BOOST_PROT - @ap_sub_lib.AP_SUB	9A4 9B5
BOOST_SENSE_N	BOOST_SENSE_N - @ap_sub_lib.AP_SUB	9A4 9B5
BOOST_SENSE_P	BOOST_SENSE_P - @ap_sub_lib.AP_SUB	9A4 9B5
BOOT_CFG_0	BOOT_CFG_0 - @ap_sub_lib.AP_SUB	13C7 13D5
BOOT_CFG_1	BOOT_CFG_1 - @ap_sub_lib.AP_SUB	13C7 13D5
BOOT_STRAP0	BOOT_STRAP0 - @ap_sub_lib.AP_SUB	5C4 5D5
	RGB<23..0> - @ap_sub_lib.AP_SUB	5D5
BOOT_STRAP1	BOOT_STRAP1 - @ap_sub_lib.AP_SUB	5B4 5D5
	RGB<23..0> - @ap_sub_lib.AP_SUB / LCD_OE - LCD_OE - @ap_sub_lib.AP_SUB (overprinted)	5D5 / 5B6
BOOT_STRAP2	BOOT_STRAP2 - @ap_sub_lib.AP_SUB	5B4 5D5
	RGB<23..0> - @ap_sub_lib.AP_SUB	5D5
BOOT_STRAP3	BOOT_STRAP3 - @ap_sub_lib.AP_SUB	5B4 5D5
	RGB<23..0> - @ap_sub_lib.AP_SUB	5D5
BST_SRC	BST_SRC - @ap_sub_lib.AP_SUB	9A5
BT_I2S_BCLK	BT_I2S_BCLK - @ap_sub_lib.AP_SUB	11D4 15B5
	I2S1_BCLK - @ap_sub_lib.AP_SUB	3C5 11D5
	VOICE_I2S_SCLK - @ap_sub_lib.AP_SUB	7B6 11D4 11D5
	I2S1_BCLK - @ap_sub_lib.AP_SUB	3C5 11D5
BT_I2S_DIN	BT_I2S_DIN - @ap_sub_lib.AP_SUB	11D4 15B5
	I2S1_DOUT - @ap_sub_lib.AP_SUB	3C5 11D5
	VOICE_I2S_SDIN - @ap_sub_lib.AP_SUB	7B6 11D4 11D5
	I2S1_DOUT - @ap_sub_lib.AP_SUB	3C5 11D5
BT_I2S_DOUT	BT_I2S_DOUT - @ap_sub_lib.AP_SUB	11C4 15B5
	I2S1_DIN - @ap_sub_lib.AP_SUB	3C5 11D5
	VOICE_I2S_SDOUT - @ap_sub_lib.AP_SUB	7B6 11C5 11D4
	I2S1_DIN - @ap_sub_lib.AP_SUB	3C5 11D5
BT_I2S_LRCLK	BT_I2S_LRCLK - @ap_sub_lib.AP_SUB	11C4 15B5
	I2S1_LRCLK - @ap_sub_lib.AP_SUB	3C5 11D5
	VOICE_I2S_FSCK - @ap_sub_lib.AP_SUB	7B6 11C5 11D4
	I2S1_LRCLK - @ap_sub_lib.AP_SUB	3C5 11D5
BT_RESET	BT_RESET - @ap_sub_lib.AP_SUB	3C5 15B7
BT_UART_CTS_N	BT_UART_CTS_N - @ap_sub_lib.AP_SUB	15B7 15C6
	AP_UART3_RTS_N - @ap_sub_lib.AP_SUB	3C5 15C7
BT_UART_RTS_N	BT_UART_RTS_N - @ap_sub_lib.AP_SUB	15B7 15C6
	AP_UART3_CTS_N - @ap_sub_lib.AP_SUB	3C5 15C7
BT_UART_RXD	BT_UART_RXD - @ap_sub_lib.AP_SUB	15B7 15C6
	AP_UART3_TXD - @ap_sub_lib.AP_SUB	3C5 15C7 15C7
	GPS_UART_RX - @ap_sub_lib.AP_SUB	15B5 15C6
	AP_UART3_TXD - @ap_sub_lib.AP_SUB	3C5 15C7 15C7
BT_UART_TXD	BT_UART_TXD - @ap_sub_lib.AP_SUB	15B7 15C6
	AP_UART3_RXD - @ap_sub_lib.AP_SUB	3C5 15C7 15C7
	GPS_UART_TX - @ap_sub_lib.AP_SUB	15B5 15C6
	AP_UART3_RXD - @ap_sub_lib.AP_SUB	3C5 15C7 15C7
CAM_RST	CAM_RST - @ap_sub_lib.AP_SUB	14C3
CAM_RST_N	CAM_RST_N - @ap_sub_lib.AP_SUB	14C5
CEATAPI_CLK	CEATAPI_CLK - @ap_sub_lib.AP_SUB	4D6
CFSB	CFSB - @ap_sub_lib.AP_SUB	2B6
CLK_32K_GRAPE	CLK_32K_GRAPE - @ap_sub_lib.AP_SUB	9A6 13C7
CLK_32K_M2	CLK_32K_M2 - @ap_sub_lib.AP_SUB	5C8 9A5
CLK_32K_M2_R	CLK_32K_M2_R - @ap_sub_lib.AP_SUB	9A6
CLK_32K_PMU	CLK_32K_PMU - @ap_sub_lib.AP_SUB	9A7 9A8 9B7
CODEC_I2S_BCLK	CODEC_I2S_BCLK - @ap_sub_lib.AP_SUB	7C6 11D4
	I2S0_BCLK - @ap_sub_lib.AP_SUB	5C8 11D5
CODEC_I2S_DIN	CODEC_I2S_DIN - @ap_sub_lib.AP_SUB	7C6 11D4
	I2S0_DOUT - @ap_sub_lib.AP_SUB	5C8 11D5
CODEC_I2S_DOUT	CODEC_I2S_DOUT - @ap_sub_lib.AP_SUB	7C6 11D4
	I2S0_DIN - @ap_sub_lib.AP_SUB	5C8 11D5
CODEC_I2S_LRCLK	CODEC_I2S_LRCLK - @ap_sub_lib.AP_SUB	7C6 11D4
	I2S0_LRCLK - @ap_sub_lib.AP_SUB	5C8 11D5
CODEC_I2S_MCLK	CODEC_I2S_MCLK - @ap_sub_lib.AP_SUB	7C6 11D4
	I2S0_MCK - @ap_sub_lib.AP_SUB	5C8 11D5
CODEC_IRQ_N	CODEC_IRQ_N - @ap_sub_lib.AP_SUB	5D5 7C6 9B7
	RGB<23..0> - @ap_sub_lib.AP_SUB	5D5
CODEC_L61_RET_SNS	CODEC_L61_RET_SNS - @ap_sub_lib.AP_SUB	7A6 12A5
CODEC_LINEIN_N	CODEC_LINEIN_N - @ap_sub_lib.AP_SUB	15B8
CODEC_LINEIN_P	CODEC_LINEIN_P - @ap_sub_lib.AP_SUB	15A8
CODEC_LINEOUT_N	CODEC_LINEOUT_N - @ap_sub_lib.AP_SUB	15A8
CODEC_LINEOUT_P	CODEC_LINEOUT_P - @ap_sub_lib.AP_SUB	15A8
CODEC_LINE_OUT_L61_L	CODEC_LINE_OUT_L61_L - @ap_sub_lib.AP_SUB	7C4
CODEC_LINE_OUT_L61_R	CODEC_LINE_OUT_L61_R - @ap_sub_lib.AP_SUB	7C4
COUT	COUT - @ap_sub_lib.AP_SUB	6C5
CPX0	CPX0 - @ap_sub_lib.AP_SUB	13D7
CPX1	CPX1 - @ap_sub_lib.AP_SUB	13C7
CPY0	CPY0 - @ap_sub_lib.AP_SUB	13D7
CPY1	CPY1 - @ap_sub_lib.AP_SUB	13C7
CVBS_OUT	CVBS_OUT - @ap_sub_lib.AP_SUB	6C5
DAC_COMP	DAC_COMP - @ap_sub_lib.AP_SUB	5B8
DAC_IREF	DAC_IREF - @ap_sub_lib.AP_SUB	5B8
DAC_OUT1	DAC_OUT1 - @ap_sub_lib.AP_SUB	5B8 6C3
DAC_OUT2	DAC_OUT2 - @ap_sub_lib.AP_SUB	5B8 6C3
DAC_OUT3	DAC_OUT3 - @ap_sub_lib.AP_SUB	5B8 6C3
DAC_VREF	DAC_VREF - @ap_sub_lib.AP_SUB	5B8
DDR_A0	DDR_A0 - @ap_sub_lib.AP_SUB	3B3
DDR_A1	DDR_A1 - @ap_sub_lib.AP_SUB	3B3
DDR_A2	DDR_A2 - @ap_sub_lib.AP_SUB	3B3
DDR_A3	DDR_A3 - @ap_sub_lib.AP_SUB	3B3
DDR_A4	DDR_A4 - @ap_sub_lib.AP_SUB	3B3
DDR_A5	DDR_A5 - @ap_sub_lib.AP_SUB	3B3
DDR_A6	DDR_A6 - @ap_sub_lib.AP_SUB	3B3
DDR_A7	DDR_A7 - @ap_sub_lib.AP_SUB	3B3
DDR_A8	DDR_A8 - @ap_sub_lib.AP_SUB	3B3
DDR_A9	DDR_A9 - @ap_sub_lib.AP_SUB	3B3
DDR_A10	DDR_A10 - @ap_sub_lib.AP_SUB	3B3
DDR_A11	DDR_A11 - @ap_sub_lib.AP_SUB	3B3
DDR_A12	DDR_A12 - @ap_sub_lib.AP_SUB	3B3
DDR_A13	DDR_A13 - @ap_sub_lib.AP_SUB	3B3
DDR_BA0	DDR_BA0 - @ap_sub_lib.AP_SUB	3B3
DDR_BA1	DDR_BA1 - @ap_sub_lib.AP_SUB	3B3
DDR_CAS_N	DDR_CAS_N - @ap_sub_lib.AP_SUB	3A3
DDR_CKE0	DDR_CKE0 - @ap_sub_lib.AP_SUB	3B3
DDR_CKE1	DDR_CKE1 - @ap_sub_lib.AP_SUB	3B3
DDR_DM0	DDR_DM0 - @ap_sub_lib.AP_SUB	3B4
DDR_DM1	DDR_DM1 - @ap_sub_lib.AP_SUB	3B4
DDR_DM2	DDR_DM2 - @ap_sub_lib.AP_SUB	3B4
DDR_DM3	DDR_DM3 - @ap_sub_lib.AP_SUB	3B4
DDR_RAS_N	DDR_RAS_N - @ap_sub_lib.AP_SUB	3A3
DDR_WE_N	DDR_WE_N - @ap_sub_lib.AP_SUB	3A3
DEBUG_RST_N	DEBUG_RST_N - @ap_sub_lib.AP_SUB	15B5
DEBUG_SW	DEBUG_SW - @ap_sub_lib.AP_SUB	4B8
DEV_NIMBUS_A_SDI	DEV_NIMBUS_A_SDI - @ap_sub_lib.AP_SUB	13C5
DEV_NIMBUS_A_SDO	DEV_NIMBUS_A_SDO - @ap_sub_lib.AP_SUB	13C5
DFU_STATUS	DFU_STATUS - @ap_sub_lib.AP_SUB	2C2
DOCK_3_3V	DOCK_3_3V - @ap_sub_lib.AP_SUB	12C3
DOCK_C	DOCK_C - @ap_sub_lib.AP_SUB	12A2 12C6
DOCK_COMP	DOCK_COMP - @ap_sub_lib.AP_SUB	12A3 12C6
DOCK_FW_PWR	DOCK_FW_PWR - @ap_sub_lib.AP_SUB	9A8 12C6
DOCK_RESET_N	DOCK_RESET_N - @ap_sub_lib.AP_SUB	12C3
DOCK_RTCK	DOCK_RTCK - @ap_sub_lib.AP_SUB	12C3
DOCK_TCK	DOCK_TCK - @ap_sub_lib.AP_SUB	12C6 15C6
DOCK_TCK_MUX	DOCK_TCK_MUX - @ap_sub_lib.AP_SUB	15D5
DOCK_TDI	DOCK_TDI - @ap_sub_lib.AP_SUB	12C6 15C6
DOCK_TDI_MUX	DOCK_TDI_MUX - @ap_sub_lib.AP_SUB	15D5
DOCK_TDO	DOCK_TDO - @ap_sub_lib.AP_SUB	2B7 12C6
DOCK_TMS	DOCK_TMS - @ap_sub_lib.AP_SUB @ap_sub_lib.AP_SUB (overprinted)	2B8 12C8
DOCK_TRST*	DOCK_TRST* - @ap_sub_lib.AP_SUB	2B8
DOCK_UART_CTRL	DOCK_UART_CTRL - @ap_sub_lib.AP_SUB	9B7 15D8
DOCK_USB_PWR	DOCK_USB_PWR - @ap_sub_lib.AP_SUB	12B7
DOCK_Y	DOCK_Y - @ap_sub_lib.AP_SUB	12A2 12C6
EXT_MIC_L61+	EXT_MIC_L61+ - @ap_sub_lib.AP_SUB	8D2
EXT_MIC_L61_N	EXT_MIC_L61_N - @ap_sub_lib.AP_SUB	7A5 8C7
EXT_MIC_L61_P_RL	EXT_MIC_L61_P_RL - @ap_sub_lib.AP_SUB	8D5
F0AD<0>	F0AD<0> - @ap_sub_lib.AP_SUB	4B7 4C7
F0AD<7..0>	F0AD<7..0> - @ap_sub_lib.AP_SUB	4C6
F0AD<1>	F0AD<1> - @ap_sub_lib.AP_SUB	4B7 4C7
F0AD<2>	F0AD<2> - @ap_sub_lib.AP_SUB	4B7 4C7
F0AD<3>	F0AD<3> - @ap_sub_lib.AP_SUB	4B7 4C7
F0AD<4>	F0AD<4> - @ap_sub_lib.AP_SUB	4B7 4B7
F0AD<5>	F0AD<5> - @ap_sub_lib.AP_SUB	4A7 4B7
F0AD<6>	F0AD<6> - @ap_sub_lib.AP_SUB	4A7 4B7
F0AD<7>	F0AD<7> - @ap_sub_lib.AP_SUB	4A7 4B7
F0ALE	F0ALE - @ap_sub_lib.AP_SUB	4B5 4C6
F0CE0_N	F0CE0_N - @ap_sub_lib.AP_SUB	4B5 4C6
F0CE1_N	F0CE1_N - @ap_sub_lib.AP_SUB	4B5 4C6
F0CE2_N	F0CE2_N - @ap_sub_lib.AP_SUB	4B5 4C6
F0CE3_N	F0CE3_N - @ap_sub_lib.AP_SUB	4B5 4C6
F0CE4_N	F0CE4_N - @ap_sub_lib.AP_SUB	4D6
F0CE5_N	F0CE5_N - @ap_sub_lib.AP_SUB	4D6
F0CE6_N	F0CE6_N - @ap_sub_lib.AP_SUB	4D6
F0CE7_N	F0CE7_N - @ap_sub_lib.AP_SUB	4D6
F0CLE	F0CLE - @ap_sub_lib.AP_SUB	4A5 4C6
F0RDYBSY0_N	F0RDYBSY0_N - @ap_sub_lib.AP_SUB	4A5 4D6
F0RDYBSY1_N	F0RDYBSY1_N - @ap_sub_lib.AP_SUB	4A5 4D6
F0RDYBSY2_N	F0RDYBSY2_N - @ap_sub_lib.AP_SUB	4A5 4D6
F0RDYBSY3_N	F0RDYBSY3_N - @ap_sub_lib.AP_SUB	4A5 4D6
F0RE_N	F0RE_N - @ap_sub_lib.AP_SUB	4A5 4C6
F0WE_N	F0WE_N - @ap_sub_lib.AP_SUB	4A5 4C6
F0WP_N	F0WP_N - @ap_sub_lib.AP_SUB	4A5 4D6 4D6
FILT+	FILT+ - @ap_sub_lib.AP_SUB	7B4
FLASH_CLK	FLASH_CLK - @ap_sub_lib.AP_SUB	4A4 4C1
	SPI0_SCLK - @ap_sub_lib.AP_SUB	2C3 4C2
FLASH_CS_N	FLASH_CS_N - @ap_sub_lib.AP_SUB	4B1 4C1
	SPI0_CS_N - @ap_sub_lib.AP_SUB	2C3 4C2
FLASH_CTRL	FLASH_CTRL - @ap_sub_lib.AP_SUB	14C5
FLASH_DIN	FLASH_DIN - @ap_sub_lib.AP_SUB	4A4 4C1
	SPI0_MOSI - @ap_sub_lib.AP_SUB	2B3 4C2
FLASH_DOUT	FLASH_DOUT - @ap_sub_lib.AP_SUB	4A2 4C1
	SPI0_MISO - @ap_sub_lib.AP_SUB	2B3 4C2
FLASH_HOLD*	FLASH_HOLD* - @ap_sub_lib.AP_SUB	4A4
FLASH_WP*	FLASH_WP* - @ap_sub_lib.AP_SUB	4B4
FORCE_DFU	FORCE_DFU - @ap_sub_lib.AP_SUB	2C2
FSOURCE	FSOURCE - @ap_sub_lib.AP_SUB	2B6
FW_PWR_SNS	FW_PWR_SNS - @ap_sub_lib.AP_SUB	9A8
GND_PMU	GND_PMU - @ap_sub_lib.AP_SUB	9A5
GPS_UART_CTS_N	GPS_UART_CTS_N - @ap_sub_lib.AP_SUB	15B5
GPS_UART_RTS_N	GPS_UART_RTS_N - @ap_sub_lib.AP_SUB	15A5
GRAPE_BOOST_LDO	GRAPE_BOOST_LDO - @ap_sub_lib.AP_SUB	9B1
GRAPE_RESET_N	GRAPE_RESET_N - @ap_sub_lib.AP_SUB	3B5 13C8
GSM_TXBURST_IND_N	GSM_TXBURST_IND_N - @ap_sub_lib.AP_SUB	15B6
HOLD_KEY	HOLD_KEY - @ap_sub_lib.AP_SUB	3C5 11A3
HP_AUD_L_L61	HP_AUD_L_L61 - @ap_sub_lib.AP_SUB	7C1 7C1 8C8
HP_AUD_L_L61_CONN	HP_AUD_L_L61_CONN - @ap_sub_lib.AP_SUB	8C4
HP_AUD_L_L61_RL	HP_AUD_L_L61_RL - @ap_sub_lib.AP_SUB	8C6
HP_AUD_R_L61	HP_AUD_R_L61 - @ap_sub_lib.AP_SUB	7C2 7C2 8C8
HP_AUD_R_L61_CONN	HP_AUD_R_L61_CONN - @ap_sub_lib.AP_SUB	8C4
HP_AUD_R_L61_RL	HP_AUD_R_L61_RL - @ap_sub_lib.AP_SUB	8C6
HP_DETECT_FL_L61	HP_DETECT_FL_L61 - @ap_sub_lib.AP_SUB	8B3
HP_DETECT_L61_SW	HP_DETECT_L61_SW - @ap_sub_lib.AP_SUB	8C3
HP_DETECT_PMU	HP_DETECT_PMU - @ap_sub_lib.AP_SUB	7C3 8C3 9B7
HP_L_SNUB	HP_L_SNUB - @ap_sub_lib.AP_SUB	8B7
HP_REF_L61	HP_REF_L61 - @ap_sub_lib.AP_SUB	7C3 8D4
HP_RET_L61	HP_RET_L61 - @ap_sub_lib.AP_SUB	8C5
HP_R_SNUB	HP_R_SNUB - @ap_sub_lib.AP_SUB	8B8
I2C0_SCL_1V8	I2C0_SCL_1V8 - @ap_sub_lib.AP_SUB	5C8 7C6 8A4 8A4 9B7 10B5
I2C0_SDA_1V8	I2C0_SDA_1V8 - @ap_sub_lib.AP_SUB	5C8 7C6 9B7 10B5
I2C1_SCL_3V0	I2C1_SCL_3V0 - @ap_sub_lib.AP_SUB	2B1 14B5 16C6
I2C1_SDA_3V0	I2C1_SDA_3V0 - @ap_sub_lib.AP_SUB	2B1 14B5 16C4
I2S0_MCK_AP	I2S0_MCK_AP - @ap_sub_lib.AP_SUB	5C8
I2S1_MCK	I2S1_MCK - @ap_sub_lib.AP_SUB	3C5 7C7
I2S2_MCK	I2S2_MCK - @ap_sub_lib.AP_SUB	3C5
INTMICN	INTMICN - @ap_sub_lib.AP_SUB	7A4
INTMICP	INTMICP - @ap_sub_lib.AP_SUB	7A4
INT_MIC_N	INT_MIC_N - @ap_sub_lib.AP_SUB	7A3 12B6
INT_MIC_P	INT_MIC_P - @ap_sub_lib.AP_SUB	7A3 12B6
IPC_MISO	IPC_MISO - @ap_sub_lib.AP_SUB	4C1 15B6
	SPI2_MISO - @ap_sub_lib.AP_SUB	4C2
IPC_MOSI	IPC_MOSI - @ap_sub_lib.AP_SUB	4C1 15A6
	SPI2_MOSI - @ap_sub_lib.AP_SUB	4C2
IPC_MRDY	IPC_MRDY - @ap_sub_lib.AP_SUB	3C5 15A6
IPC_SCLK	IPC_SCLK - @ap_sub_lib.AP_SUB	4C1 15B6
	SPI2_SCLK - @ap_sub_lib.AP_SUB	4C2
IPC_SRDY	IPC_SRDY - @ap_sub_lib.AP_SUB	4C1 15A6
	SPI2_CS_N - @ap_sub_lib.AP_SUB	4C2
IREF	IREF - @ap_sub_lib.AP_SUB	9C7
IR_IN	IR_IN - @ap_sub_lib.AP_SUB	13D7
KEEPACT	KEEPACT - @ap_sub_lib.AP_SUB	9C7
L61_LINE_IN_L	L61_LINE_IN_L - @ap_sub_lib.AP_SUB	7A6 7C4
L61_LINE_IN_L_F	L61_LINE_IN_L_F - @ap_sub_lib.AP_SUB	7A7
L61_LINE_IN_R	L61_LINE_IN_R - @ap_sub_lib.AP_SUB	7A6 7B4
L61_LINE_IN_R_F	L61_LINE_IN_R_F - @ap_sub_lib.AP_SUB	7A7
L61_SPKR_CONN_N	L61_SPKR_CONN_N - @ap_sub_lib.AP_SUB	7B8 7C4 12C2
L61_SPKR_CONN_P	L61_SPKR_CONN_P - @ap_sub_lib.AP_SUB	7B8 7C4 12C2
LCD_BL_CA	LCD_BL_CA - @ap_sub_lib.AP_SUB	9A4 9A5 13A7
LCD_BL_CA_FB	LCD_BL_CA_FB - @ap_sub_lib.AP_SUB	9A4
LCD_BL_CC	LCD_BL_CC - @ap_sub_lib.AP_SUB	9B5 13A7
LCD_BOOST_CTRL	LCD_BOOST_CTRL - @ap_sub_lib.AP_SUB	10B4 13A7
LCD_BOOST_OUTPUT_CTRL	LCD_BOOST_OUTPUT_CTRL - @ap_sub_lib.AP_SUB	10B2
LCD_BOOST_SEL	LCD_BOOST_SEL - @ap_sub_lib.AP_SUB	13A6
LCD_BOOST_VOUT	LCD_BOOST_VOUT - @ap_sub_lib.AP_SUB	10B1 13A7
LCD_BST_FB	LCD_BST_FB - @ap_sub_lib.AP_SUB	10B2
LCD_BST_SW	LCD_BST_SW - @ap_sub_lib.AP_SUB	10B2
LCD_BST_VOUT_D	LCD_BST_VOUT_D - @ap_sub_lib.AP_SUB	10B2
LCD_CHECKSUM	LCD_CHECKSUM - @ap_sub_lib.AP_SUB	13A5
LCD_CHECKSUM_R	LCD_CHECKSUM_R - @ap_sub_lib.AP_SUB	13A6
LCD_EXTCLK	LCD_EXTCLK - @ap_sub_lib.AP_SUB	5B6
LCD_HS	LCD_HS - @ap_sub_lib.AP_SUB	5B6
LCD_RST_C	LCD_RST_C - @ap_sub_lib.AP_SUB	13B6
LCD_RST_N	LCD_RST_N - @ap_sub_lib.AP_SUB	5B5 13B5
LCD_SYNC	LCD_SYNC - @ap_sub_lib.AP_SUB	13A7 13C5
LCD_VCLK	LCD_VCLK - @ap_sub_lib.AP_SUB	5B6
LCD_VS	LCD_VS - @ap_sub_lib.AP_SUB	5B6
LCM_MIPI_CLK_N	LCM_MIPI_CLK_N - @ap_sub_lib.AP_SUB	3A8 3C7 13A5 14C4
LCM_MIPI_CLK_P	LCM_MIPI_CLK_P - @ap_sub_lib.AP_SUB	3A8 3C7 13A5 14B4
LCM_MIPI_DATA0_N	LCM_MIPI_DATA0_N - @ap_sub_lib.AP_SUB	3B8 3C7 13A5 14C4
LCM_MIPI_DATA0_P	LCM_MIPI_DATA0_P - @ap_sub_lib.AP_SUB	3B8 3C7 13A5 14C4
LCM_MIPI_DATA1_N	LCM_MIPI_DATA1_N - @ap_sub_lib.AP_SUB	3B8 3C7 13A6 14B4
LCM_MIPI_DATA1_P	LCM_MIPI_DATA1_P - @ap_sub_lib.AP_SUB	3B8 3C7 13A6 14B4
LED_LX	LED_LX - @ap_sub_lib.AP_SUB	9A4 9A5
LINEOUT_L_F	LINEOUT_L_F - @ap_sub_lib.AP_SUB	12A8
LINEOUT_R_F	LINEOUT_R_F - @ap_sub_lib.AP_SUB	12B8
LINE_IN_L	LINE_IN_L - @ap_sub_lib.AP_SUB	7A8 12A7
LINE_IN_R	LINE_IN_R - @ap_sub_lib.AP_SUB	7A8 12A7
LINE_OUT_L	LINE_OUT_L - @ap_sub_lib.AP_SUB	7C1 12A8
LINE_OUT_L_CONN	LINE_OUT_L_CONN - @ap_sub_lib.AP_SUB	12A5 12C3
LINE_OUT_R	LINE_OUT_R - @ap_sub_lib.AP_SUB	7C1 12B8
LINE_OUT_R_CONN	LINE_OUT_R_CONN - @ap_sub_lib.AP_SUB	12B5 12C3
LINE_REF_L61	LINE_REF_L61 - @ap_sub_lib.AP_SUB	7C3 12A5
LINE_RET_SENSE_CONN	LINE_RET_SENSE_CONN - @ap_sub_lib.AP_SUB	12A2 12C3
LINE_RET_SENSE_L61	LINE_RET_SENSE_L61 - @ap_sub_lib.AP_SUB	7A8 7C4
L_LINE_IN_CONN	L_LINE_IN_CONN - @ap_sub_lib.AP_SUB	12A5 12C3
MENU_KEN_CONN_N	MENU_KEN_CONN_N - @ap_sub_lib.AP_SUB	12B4
MENU_KEY	MENU_KEY - @ap_sub_lib.AP_SUB	3C5 11A3
MENU_KEY*	MENU_KEY* - @ap_sub_lib.AP_SUB	9B8 11A5 11A5 12B3
MENU_KEY_R_N	MENU_KEY_R_N - @ap_sub_lib.AP_SUB	9C7
MIC1_L61	MIC1_L61 - @ap_sub_lib.AP_SUB	7A5 7B4
MIC1_REF_L61	MIC1_REF_L61 - @ap_sub_lib.AP_SUB	7A5 7B4
MIC2_L61	MIC2_L61 - @ap_sub_lib.AP_SUB	7A6 7B4
MIC2_REF_L61	MIC2_REF_L61 - @ap_sub_lib.AP_SUB	7A6 7B4
MIC2_SDET	MIC2_SDET - @ap_sub_lib.AP_SUB	7A5 7B4 8A1 8D7
MIC3_BIAS	MIC3_BIAS - @ap_sub_lib.AP_SUB	7B4
MICBIAS1_L61	MICBIAS1_L61 - @ap_sub_lib.AP_SUB	7A4 7B2 7B2
MICBIAS2_L61	MICBIAS2_L61 - @ap_sub_lib.AP_SUB	7B4 8D7
MICBIAS2_L61_R	MICBIAS2_L61_R - @ap_sub_lib.AP_SUB	8D6
MIC_BIAS_LDO	MIC_BIAS_LDO - @ap_sub_lib.AP_SUB	7D2 9B2
MIKEY_BYPASS	MIKEY_BYPASS - @ap_sub_lib.AP_SUB	8A2
MIKEY_DETECT	MIKEY_DETECT - @ap_sub_lib.AP_SUB	8A3
MIKEY_INT_N	MIKEY_INT_N - @ap_sub_lib.AP_SUB	8A4 9B8
MIKEY_MICBIAS	MIKEY_MICBIAS - @ap_sub_lib.AP_SUB	8A2 8D7
MIKE_AVDD	MIKE_AVDD - @ap_sub_lib.AP_SUB	8B3
N72_SPI_CS_N	N72_SPI_CS_N - @ap_sub_lib.AP_SUB	5D5
	RGB<23..0> - @ap_sub_lib.AP_SUB	5D5
NIMBUS_A_SCLK	NIMBUS_A_SCLK - @ap_sub_lib.AP_SUB	13C5
NIMBUS_GPIO1	NIMBUS_GPIO1 - @ap_sub_lib.AP_SUB	13C4
NIMBUS_GPIO2	NIMBUS_GPIO2 - @ap_sub_lib.AP_SUB	13C5
NIMBUS_GPIO3	NIMBUS_GPIO3 - @ap_sub_lib.AP_SUB	13C5
NIMBUS_JTAG_RESET	NIMBUS_JTAG_RESET - @ap_sub_lib.AP_SUB	13C3
NIMBUS_JTAG_RTCK	NIMBUS_JTAG_RTCK - @ap_sub_lib.AP_SUB	13C1 13C7 13D5
NIMBUS_JTAG_TCK	NIMBUS_JTAG_TCK - @ap_sub_lib.AP_SUB	13C1 13C7
NIMBUS_JTAG_TDI	NIMBUS_JTAG_TDI - @ap_sub_lib.AP_SUB	13C1 13C7
NIMBUS_JTAG_TDO	NIMBUS_JTAG_TDO - @ap_sub_lib.AP_SUB	13C1 13C7
NIMBUS_JTAG_TMS	NIMBUS_JTAG_TMS - @ap_sub_lib.AP_SUB	13C7
NIMBUS_JTAG_TMS_CONN	NIMBUS_JTAG_TMS_CONN - @ap_sub_lib.AP_SUB	13C1
NIMBUS_PANEL_CONFIG	NIMBUS_PANEL_CONFIG - @ap_sub_lib.AP_SUB	13C3 13C5
NIMBUS_PANEL_IN<0>	NIMBUS_PANEL_IN<0> - @ap_sub_lib.AP_SUB	13D1 13D7
NIMBUS_PANEL_IN<1>	NIMBUS_PANEL_IN<1> - @ap_sub_lib.AP_SUB	13D1 13D7
NIMBUS_PANEL_IN<2>	NIMBUS_PANEL_IN<2> - @ap_sub_lib.AP_SUB	13D1 13D7
NIMBUS_PANEL_IN<3>	NIMBUS_PANEL_IN<3> - @ap_sub_lib.AP_SUB	13D1 13D7
NIMBUS_PANEL_IN<4>	NIMBUS_PANEL_IN<4> - @ap_sub_lib.AP_SUB	13D1 13D7
NIMBUS_PANEL_IN<5>	NIMBUS_PANEL_IN<5> - @ap_sub_lib.AP_SUB	13D1 13D7
NIMBUS_PANEL_IN<6>	NIMBUS_PANEL_IN<6> - @ap_sub_lib.AP_SUB	13D1 13D7
NIMBUS_PANEL_IN<7>	NIMBUS_PANEL_IN<7> - @ap_sub_lib.AP_SUB	13D1 13D7
NIMBUS_PANEL_IN<8>	NIMBUS_PANEL_IN<8> - @ap_sub_lib.AP_SUB	13D1 13D7
NIMBUS_PANEL_IN<9>	NIMBUS_PANEL_IN<9> - @ap_sub_lib.AP_SUB	13D1 13D7
NIMBUS_SPI_MOSI_R	NIMBUS_SPI_MOSI_R - @ap_sub_lib.AP_SUB	13C5
NIMBUS_TM<1>	NIMBUS_TM<1> - @ap_sub_lib.AP_SUB	13C7 13D5
NIMBUS_TRST_N	NIMBUS_TRST_N - @ap_sub_lib.AP_SUB	13C3
NIMBUS_VSTM_OUT<0>	NIMBUS_VSTM_OUT<0> - @ap_sub_lib.AP_SUB	13C1 13D5
NIMBUS_VSTM_OUT<1>	NIMBUS_VSTM_OUT<1> - @ap_sub_lib.AP_SUB	13C1 13D5
NIMBUS_VSTM_OUT<2>	NIMBUS_VSTM_OUT<2> - @ap_sub_lib.AP_SUB	13C1 13D5
NIMBUS_VSTM_OUT<3>	NIMBUS_VSTM_OUT<3> - @ap_sub_lib.AP_SUB	13C3 13D5
NIMBUS_VSTM_OUT<4>	NIMBUS_VSTM_OUT<4> - @ap_sub_lib.AP_SUB	13C3 13D5
NIMBUS_VSTM_OUT<5>	NIMBUS_VSTM_OUT<5> - @ap_sub_lib.AP_SUB	13D3 13D5
NIMBUS_VSTM_OUT<6>	NIMBUS_VSTM_OUT<6> - @ap_sub_lib.AP_SUB	13D3 13D5
NIMBUS_VSTM_OUT<7>	NIMBUS_VSTM_OUT<7> - @ap_sub_lib.AP_SUB	13D3 13D5
NIMBUS_VSTM_OUT<8>	NIMBUS_VSTM_OUT<8> - @ap_sub_lib.AP_SUB	13D3 13D5
NIMBUS_VSTM_OUT<9>	NIMBUS_VSTM_OUT<9> - @ap_sub_lib.AP_SUB	13D3 13D5
NIMBUS_VSTM_OUT<10>	NIMBUS_VSTM_OUT<10> - @ap_sub_lib.AP_SUB	13D3 13D5
NIMBUS_VSTM_OUT<11>	NIMBUS_VSTM_OUT<11> -	13D3 13D5
NIMBUS_VSTM_OUT<12>	NIMBUS_VSTM_OUT<12> - @ap_sub_lib.AP_SUB	13D3 13D5
NIMBUS_VSTM_OUT<13>	NIMBUS_VSTM_OUT<13> - @ap_sub_lib.AP_SUB	13D3 13D5
NIMBUS_VSTM_OUT<14>	NIMBUS_VSTM_OUT<14> - @ap_sub_lib.AP_SUB	13D3 13D5
NTC	NTC - @ap_sub_lib.AP_SUB	9B7 15B7
OSC32I	OSC32I - @ap_sub_lib.AP_SUB	9D6
OSC32O	OSC32O - @ap_sub_lib.AP_SUB	9D6
PMU_IRQ_N	PMU_IRQ_N - @ap_sub_lib.AP_SUB	5D5 9C7
	RGB<23..0> - @ap_sub_lib.AP_SUB	5D5
POD_TO_ACC_AP	POD_TO_ACC_AP - @ap_sub_lib.AP_SUB	2C7 15C8
POD_TO_ACC_DOCK	POD_TO_ACC_DOCK - @ap_sub_lib.AP_SUB	12C8 15D6
POD_TO_ACC_DOCK_CONN	POD_TO_ACC_DOCK_CONN - @ap_sub_lib.AP_SUB	12C6
PP1V3_VIBE	PP1V3_VIBE - @ap_sub_lib.AP_SUB	9B2 10D4
PP1V8	PP1V8 - @ap_sub_lib.AP_SUB	2B8 2C2 2C8 2D7 3C1 3D6 3D6 3D8 5B5 5C8 5D6 5D7

D	C	B	A

8	7	6	5	4	3	2	1

		7C8 7D2 7D8 9A6 9A8 9C2 9C4 10C5 11A3 11B4 11C3 11C4 13A5 13A8 14C6 15D5
PP1V8_GRAPE	PP1V8_GRAPE - @ap_sub_lib.AP_SUB	9A7 9C4 13B5 13C3 13C8 13D5 13D8
PP1V8_OSC	PP1V8_OSC - @ap_sub_lib.AP_SUB	2D6
PP1V8_SDRAM	PP1V8_SDRAM - @ap_sub_lib.AP_SUB	3D2 3D2 8A4 8B4 9C4 13B5 14C3
PP1V8_TW	PP1V8_TW - @ap_sub_lib.AP_SUB	2C3
PP1V8_VSD2	PP1V8_VSD2 - @ap_sub_lib.AP_SUB	10D6 15B5 15D2 15D2 15D5 15D7
PP1V35	PP1V35 - @ap_sub_lib.AP_SUB	2A2 2A7 2C7 2D2 3D8 9C3 9C4
PP1V35_FB	PP1V35_FB - @ap_sub_lib.AP_SUB	9C5
PP1V35_PLL	PP1V35_PLL - @ap_sub_lib.AP_SUB	2C6
PP1V35_VDD_CORE	PP1V35_VDD_CORE - @ap_sub_lib.AP_SUB	2D3
PP3V0_CAM	PP3V0_CAM - @ap_sub_lib.AP_SUB	9B2 14B7
PP3V0_CODEC	PP3V0_CODEC - @ap_sub_lib.AP_SUB	9B3
PP3V0_IO	PP3V0_IO - @ap_sub_lib.AP_SUB	2B8 2C1 2C2 2C8 2D2 4B2 4D7 9B2 10C8 15D6 15D6
PP3V0_IO_ACCEL	PP3V0_IO_ACCEL - @ap_sub_lib.AP_SUB	10C7
PP3V0_LCD	PP3V0_LCD - @ap_sub_lib.AP_SUB	9B3 13A8
PP3V0_NAND	PP3V0_NAND - @ap_sub_lib.AP_SUB	4B6 4C5 9B1
PP3V0_NAND_VDD	PP3V0_NAND_VDD - @ap_sub_lib.AP_SUB	4D5
PP3V0_SYS	PP3V0_SYS - @ap_sub_lib.AP_SUB	2C3
PP3V0_VIDEO	PP3V0_VIDEO - @ap_sub_lib.AP_SUB	6C5 9B3
PP3V0_VIDEO_DAC	PP3V0_VIDEO_DAC - @ap_sub_lib.AP_SUB	5B8 5D8
PP3V3_ACC	PP3V3_ACC - @ap_sub_lib.AP_SUB	9B2 12B1
PROX_RX	PROX_RX - @ap_sub_lib.AP_SUB	13D8
PROX_TX	PROX_TX - @ap_sub_lib.AP_SUB	13C5
PWR_KEY*	PWR_KEY* - @ap_sub_lib.AP_SUB	8D1 9B8 11A5
PWR_KEYR_N	PWR_KEYR_N - @ap_sub_lib.AP_SUB	9B7
RADIO_AUDIO_RET_SNS	RADIO_AUDIO_RET_SNS - @ap_sub_lib.AP_SUB	15A7
RADIO_ON	RADIO_ON - @ap_sub_lib.AP_SUB	2C2 15B6
RCVR_CONN_N	RCVR_CONN_N - @ap_sub_lib.AP_SUB	7B2 7C4
RCVR_CONN_P	RCVR_CONN_P - @ap_sub_lib.AP_SUB	7B2 7C4
RCVR_N_CONN	RCVR_N_CONN - @ap_sub_lib.AP_SUB	16C5
RCVR_P_CONN	RCVR_P_CONN - @ap_sub_lib.AP_SUB	16C4
RESET_DET_N	RESET_DET_N - @ap_sub_lib.AP_SUB	5D5 15B6
	RGB<23..0> - @ap_sub_lib.AP_SUB	5D5
RESET_L61_N	RESET_L61_N - @ap_sub_lib.AP_SUB	5C4 7C6
	RGB<23..0> - @ap_sub_lib.AP_SUB	5D5
RESET_N	RESET_N - @ap_sub_lib.AP_SUB	2A8 9C7 12C1
RESET_RC_N	RESET_RC_N - @ap_sub_lib.AP_SUB	2A7
RES_LINEIN_A_N	RES_LINEIN_A_N - @ap_sub_lib.AP_SUB	7B2
RES_LINEIN_A_P	RES_LINEIN_A_P - @ap_sub_lib.AP_SUB	7C2
RES_LINEIN_B_N	RES_LINEIN_B_N - @ap_sub_lib.AP_SUB	7B2
RES_LINEIN_B_P	RES_LINEIN_B_P - @ap_sub_lib.AP_SUB	7B2
RGB<23..0>	RGB<23..0> - @ap_sub_lib.AP_SUB	5D5
RGB<17>	RGB<17> - @ap_sub_lib.AP_SUB	5B6
RGB<18>	RGB<18> - @ap_sub_lib.AP_SUB	5B6
RGB<19>	RGB<19> - @ap_sub_lib.AP_SUB	5B6
RGB<20>	RGB<20> - @ap_sub_lib.AP_SUB	5B6
RGB<21>	RGB<21> - @ap_sub_lib.AP_SUB	5B6
RGB<22>	RGB<22> - @ap_sub_lib.AP_SUB	5B6
RGB<23>	RGB<23> - @ap_sub_lib.AP_SUB	5B6
RINGER_A	RINGER_A - @ap_sub_lib.AP_SUB	8D1 9B8 11B4
RINGER_A_R	RINGER_A_R - @ap_sub_lib.AP_SUB	9B7
R_LINE_IN_CONN	R_LINE_IN_CONN - @ap_sub_lib.AP_SUB	12A5 12C3
SFLASH_CS_N	SFLASH_CS_N - @ap_sub_lib.AP_SUB	4B3
SHDWN	SHDWN - @ap_sub_lib.AP_SUB	9B7
SIMCRD_CLK	SIMCRD_CLK - @ap_sub_lib.AP_SUB	10D6 10D8 15A6
SIMCRD_IO	SIMCRD_IO - @ap_sub_lib.AP_SUB	10D5 10D8 15A6
SIMCRD_RST	SIMCRD_RST - @ap_sub_lib.AP_SUB	10D6 10D8 15A6
SIM_DETECT	SIM_DETECT - @ap_sub_lib.AP_SUB	10D6 15A6
SIM_DETECT*	SIM_DETECT* - @ap_sub_lib.AP_SUB	10D7
SIM_VCC	SIM_VCC - @ap_sub_lib.AP_SUB	10D5 10D6 15B6
SPDIF_OUT	SPDIF_OUT - @ap_sub_lib.AP_SUB	3C5
SPKR_VQ	SPKR_VQ - @ap_sub_lib.AP_SUB	7C4
SWI_BLCTRL	SWI_BLCTRL - @ap_sub_lib.AP_SUB	5B5 9B7
SWVBUCK3	SWVBUCK3 - @ap_sub_lib.AP_SUB	9C4
SW_BOOST	SW_BOOST - @ap_sub_lib.AP_SUB	9A6 9B5
SW_BUCK1	SW_BUCK1 - @ap_sub_lib.AP_SUB	9C5
SW_BUCK2	SW_BUCK2 - @ap_sub_lib.AP_SUB	9C5
TEST_H2	TEST_H2 - @ap_sub_lib.AP_SUB	2B6
TQ0	TQ0 - @ap_sub_lib.AP_SUB	3C7
TQ1	TQ1 - @ap_sub_lib.AP_SUB	3C7
TW_ATN	TW_ATN - @ap_sub_lib.AP_SUB	2C3
TW_CLK	TW_CLK - @ap_sub_lib.AP_SUB	2C3
UMTS_RXD	UMTS_RXD - @ap_sub_lib.AP_SUB	15B7 15C2
UMTS_RXD_CTRL	UMTS_RXD_CTRL - @ap_sub_lib.AP_SUB	5D4 15C4
	RGB<23..0> - @ap_sub_lib.AP_SUB	5D5
USB_BRICKID	USB_BRICKID - @ap_sub_lib.AP_SUB	2C6 9C7 9D7
USB_DM	USB_DM - @ap_sub_lib.AP_SUB	2C6 12C1
USB_DM_DOCK	USB_DM_DOCK - @ap_sub_lib.AP_SUB	12C3
USB_DP	USB_DP - @ap_sub_lib.AP_SUB	2C6 12B1
USB_DP_DOCK	USB_DP_DOCK - @ap_sub_lib.AP_SUB	12B3
USB_PWR_NO_PROTECT	USB_PWR_NO_PROTECT - @ap_sub_lib.AP_SUB	10B8 12B8
USB_PWR_RPROT	USB_PWR_RPROT - @ap_sub_lib.AP_SUB	9C7 10B7
USB_REXT	USB_REXT - @ap_sub_lib.AP_SUB	2C6
USB_SW_GATE	USB_SW_GATE - @ap_sub_lib.AP_SUB	10A7
USB_VBUS	USB_VBUS - @ap_sub_lib.AP_SUB	2C6
VBATT_SNS	VBATT_SNS - @ap_sub_lib.AP_SUB	9B7
VBUCK2_FB	VBUCK2_FB - @ap_sub_lib.AP_SUB	9C5
VBUS_OV	VBUS_OV - @ap_sub_lib.AP_SUB	9C7 10A6
VBUS_PROT	VBUS_PROT - @ap_sub_lib.AP_SUB	2C7 9C8 10B5
VCC_MAIN	VCC_MAIN - @ap_sub_lib.AP_SUB	7D2 8B4 9A2 9A3 9B8 9C2 9C8 9D5 9D8 10B3 11A5 11B4 11B5
VCENTER	VCENTER - @ap_sub_lib.AP_SUB	9C7
VDD_ANA	VDD_ANA - @ap_sub_lib.AP_SUB	13B6
VDD_BUCK3	VDD_BUCK3 - @ap_sub_lib.AP_SUB	9C1 9C5
VDD_BUCK12	VDD_BUCK12 - @ap_sub_lib.AP_SUB	9C1 9C5
VDD_GRAPE_3V3	VDD_GRAPE_3V3 - @ap_sub_lib.AP_SUB	13C5
VDD_GRAPE_CORE	VDD_GRAPE_CORE - @ap_sub_lib.AP_SUB	13C6
VDD_H	VDD_H - @ap_sub_lib.AP_SUB	13B5
VDD_L61_VA	VDD_L61_VA - @ap_sub_lib.AP_SUB	7D4
VDD_L61_VCP	VDD_L61_VCP - @ap_sub_lib.AP_SUB	7D4
VDD_L61_VDFILT	VDD_L61_VDFILT - @ap_sub_lib.AP_SUB	7D5
VDD_L61_VLCO	VDD_L61_VLCO - @ap_sub_lib.AP_SUB	7D5
VDD_LDO2	VDD_LDO2 - @ap_sub_lib.AP_SUB	9B1 9C5
VDD_LDO10	VDD_LDO10 - @ap_sub_lib.AP_SUB	9A1 9C5
VDD_LDO11	VDD_LDO11 - @ap_sub_lib.AP_SUB	9C1 9C5
VDD_LDO16	VDD_LDO16 - @ap_sub_lib.AP_SUB	9C1 9C5
VDD_LDO47	VDD_LDO47 - @ap_sub_lib.AP_SUB	9B1 9C5
VDD_LDO358	VDD_LDO358 - @ap_sub_lib.AP_SUB	9B1 9C5
VDD_REF	VDD_REF - @ap_sub_lib.AP_SUB	9C7
VDD_RTC	VDD_RTC - @ap_sub_lib.AP_SUB	9C7
VDD_TOUCH	VDD_TOUCH - @ap_sub_lib.AP_SUB	9B1 16C5
VGATE	VGATE - @ap_sub_lib.AP_SUB	2B6

VHP	VHP - @ap_sub_lib.AP_SUB	9C6
VHPFILT+	VHPFILT+ - @ap_sub_lib.AP_SUB	7D5
VHPFILT-	VHPFILT- - @ap_sub_lib.AP_SUB	7D5
VHP_FLYC	VHP_FLYC - @ap_sub_lib.AP_SUB	7C6
VHP_FLYN	VHP_FLYN - @ap_sub_lib.AP_SUB	7C6
VHP_FLYP	VHP_FLYP - @ap_sub_lib.AP_SUB	7C6
VIBRATOR_CTRL	VIBRATOR_CTRL - @ap_sub_lib.AP_SUB	2B3 10C4
VIBRATOR_NEG	VIBRATOR_NEG - @ap_sub_lib.AP_SUB	10D3
VIDEO_AMP_EN	VIDEO_AMP_EN - @ap_sub_lib.AP_SUB	4B8 6B4
VIDEO_GND	VIDEO_GND - @ap_sub_lib.AP_SUB	5A8 6B5
VID_C	VID_C - @ap_sub_lib.AP_SUB	6C6 12A5
VID_COMP	VID_COMP - @ap_sub_lib.AP_SUB	6C6 12A5
VID_Y	VID_Y - @ap_sub_lib.AP_SUB	6B6 12A5
VIO	VIO - @ap_sub_lib.AP_SUB	15B5
VOL_DWN*	VOL_DWN* - @ap_sub_lib.AP_SUB	2B3 8D1 11C3
VOL_UP*	VOL_UP* - @ap_sub_lib.AP_SUB	2B3 8D1 11C5
VREF	VREF - @ap_sub_lib.AP_SUB	9C7
VREG_0P4V	VREG_0P4V - @ap_sub_lib.AP_SUB	3C7
VSW_CHG	VSW_CHG - @ap_sub_lib.AP_SUB	9D6
VVIB	VVIB - @ap_sub_lib.AP_SUB	15B7
WLAN_RESET	WLAN_RESET - @ap_sub_lib.AP_SUB	3C4 15B7
WLAN_SDIO_CLK	WLAN_SDIO_CLK - @ap_sub_lib.AP_SUB	3C8 15B6
WLAN_SDIO_CMD	WLAN_SDIO_CMD - @ap_sub_lib.AP_SUB	3C8 15B6
WLAN_SDIO_DATA<0>	WLAN_SDIO_DATA<0> - @ap_sub_lib.AP_SUB	3C8 15B6
WLAN_SDIO_DATA<1>	WLAN_SDIO_DATA<1> - @ap_sub_lib.AP_SUB	3C8 15B6
WLAN_SDIO_DATA<2>	WLAN_SDIO_DATA<2> - @ap_sub_lib.AP_SUB	3C8 15B6
WLAN_SDIO_DATA<3>	WLAN_SDIO_DATA<3> - @ap_sub_lib.AP_SUB	3C8 15B6
WLED2_OUT	WLED2_OUT - @ap_sub_lib.AP_SUB	9B5
WLED_PWM	WLED_PWM - @ap_sub_lib.AP_SUB	9B5
XTAL_24M_O	XTAL_24M_O - @ap_sub_lib.AP_SUB	2B6
XTAL_IN_24M	XTAL_IN_24M - @ap_sub_lib.AP_SUB	2A6
YOUT	YOUT - @ap_sub_lib.AP_SUB	6C5

Title: Cref Part Report
Design: ap_sub
Date: Feb 8 8:37:44 2008

C1	CAP_603		ap_sub[9C7]
C2	CAP_402		ap_sub[9B4]
C3	CAP_402		ap_sub[9B3]
C4	CAP_402		ap_sub[9B3]
C5	CAP_SM		ap_sub[13D8]
C6	CAP_201		ap_sub[2A7]
C7	CAP_402-LF		ap_sub[2C7]
C8	CAP_201		ap_sub[2A7]
C9	CAP_201		ap_sub[2C6]
C10	CAP_201		ap_sub[2D6]
C11	CAP_201		ap_sub[2C6]
C12	CAP_201		ap_sub[2A6]
C13	CAP_201		ap_sub[2A5]
C14	CAP_201		ap_sub[2A5]
C15	CAP_201		ap_sub[2A5]
C16	CAP_201		ap_sub[2A5]
C17	CAP_201		ap_sub[2A4]
C18	CAP_201		ap_sub[2A4]
C19	CAP_201		ap_sub[2A4]
C20	CAP_201		ap_sub[2A4]
C21	CAP_201		ap_sub[2A4]
C22	CAP_201		ap_sub[2A4]
C23	CAP_201		ap_sub[2A4]
C24	CAP_201		ap_sub[2A4]
C25	CAP_201		ap_sub[2A4]
C26	CAP_201		ap_sub[2A3]
C27	CAP_603-3		ap_sub[2A3]
C28	CAP_201		ap_sub[2A3]
C29	CAP_201		ap_sub[2A3]
C30	CAP_201		ap_sub[2D3]
C31	CAP_201		ap_sub[2A3]
C32	CAP_201		ap_sub[2A3]
C33	CAP_201		ap_sub[2D3]
C34	CAP_201		ap_sub[2C3]
C35	CAP_201		ap_sub[2C3]
C36	CAP_201		ap_sub[2D3]
C37	CAP_201		ap_sub[3D7]
C38	CAP_201		ap_sub[3C7]
C39	CAP_201		ap_sub[3D7]
C40	CAP_201		ap_sub[3D6]
C41	CAP_201		ap_sub[3D6]
C42	CAP_201		ap_sub[3C3]
C43	CAP_201		ap_sub[3D3]
C44	CAP_201		ap_sub[3C3]
C45	CAP_201		ap_sub[3C3]
C46	CAP_201		ap_sub[3D3]
C47	CAP_201		ap_sub[3C3]
C48	CAP_201		ap_sub[3C3]
C49	CAP_201		ap_sub[3D3]
C50	CAP_201		ap_sub[3C3]
C51	CAP_201		ap_sub[3C3]
C52	CAP_201		ap_sub[3D2]
C53	CAP_201		ap_sub[3C2]
C54	CAP_201		ap_sub[3C2]
C55	CAP_402-LF		ap_sub[3D2]
C56	CAP_201		ap_sub[3C2]
C57	CAP_201		ap_sub[3C2]
C58	CAP_201		ap_sub[3C2]
C59	CAP_201		ap_sub[4D8]
C60	CAP_201		ap_sub[4C5]
C61	CAP_201		ap_sub[4C5]
C62	CAP_402-LF		ap_sub[4C4]
C63	CAP_201		ap_sub[4B3]
C64	CAP_201		ap_sub[5B8]
C65	CAP_201		ap_sub[5B8]
C66	CAP_201		ap_sub[5D7]
C67	CAP_201		ap_sub[5D7]
C68	CAP_201		ap_sub[5D6]
C69	CAP_201		ap_sub[6B5]
C70	CAP_603		ap_sub[6C3]
C71	CAP_201		ap_sub[6C3]
C72	CAP_201		ap_sub[7B8]
C73	CAP_201		ap_sub[7B8]
C74	CAP_201		ap_sub[7B7]
C75	CAP_201		ap_sub[7A7]
C76	CAP_201		ap_sub[7A7]
C77	CAP_P_603-SM		ap_sub[7A7]
C78	CAP_P_603-SM		ap_sub[7A7]
C79	CAP_P_603-SM		ap_sub[7A7]
C80	CAP_201		ap_sub[7D7]
C81	CAP_201		ap_sub[7D6]
C82	CAP_201		ap_sub[7C6]
C83	CAP_201		ap_sub[7C6]
C84	CAP_201		ap_sub[7C6]
C85	CAP_402		ap_sub[7D6]
C86	CAP_402		ap_sub[7C6]
C87	CAP_402		ap_sub[7C6]
C88	CAP_201		ap_sub[7D6]
C89	CAP_201		ap_sub[7D6]
C90	CAP_402		ap_sub[7D6]
C91	CAP_201		ap_sub[7D5]
C92	CAP_402		ap_sub[7D5]
C93	CAP_201		ap_sub[7A5]
C94	CAP_201		ap_sub[7A5]
C95	CAP_201		ap_sub[7A5]
C96	CAP_201		ap_sub[7A5]
C97	CAP_P_603-SM		ap_sub[7A4]
C98	CAP_201		ap_sub[7A4]
C99	CAP_201		ap_sub[7A4]
C100	CAP_201	R48	ap_sub[7A8]
C101	CAP_P_603-SM		ap_sub[7A4]
C102	CAP_402		ap_sub[7D4]
C103	CAP_201		ap_sub[7A4]
C104	CAP_201		ap_sub[7A4]
C105	CAP_P_603-SM		ap_sub[7A4]
C106	CAP_201		ap_sub[7D4]
C107	CAP_201		ap_sub[7B4]
C108	CAP_201		ap_sub[7B4]
C109	CAP_P_0603-SM		ap_sub[7C3]
C110	CAP_201		ap_sub[7D3]
C111	CAP_402		ap_sub[7A3]
C112	CAP_201		ap_sub[7B3]
C113	CAP_P_0603-SM		ap_sub[7B3]
C114	CAP_603		ap_sub[7D3]
C115	CAP_201		ap_sub[7B3]
C116	CAP_P_0603-SM		ap_sub[7B3]
C117	CAP_402		ap_sub[7A3]
C118	CAP_603		ap_sub[7D3]
C119	CAP_P_0603-SM		ap_sub[7B3]
C120	CAP_402		ap_sub[7A3]
C121	CAP_P_603-SM		ap_sub[7C2]
C122	CAP_402-LF		ap_sub[7A2]
C123	CAP_P_603-SM		ap_sub[7C2]
C124	CAP_201		ap_sub[7B2]
C125	CAP_201		ap_sub[7B2]
C126	CAP_201		ap_sub[7C1]
C127	CAP_201		ap_sub[7C1]
C128	CAP_201		ap_sub[7C1]
C129	CAP_201		ap_sub[7C1]
C130	CAP_201		ap_sub[7C1]
C131	CAP_201		ap_sub[7C1]
C132	CAP_201		ap_sub[8B8]
C133	CAP_201		ap_sub[8B7]
C134	CAP_603		ap_sub[8D5]
C135	CAP_201		ap_sub[8B4]
C136	CAP_201		ap_sub[8B3]
C137	CAP_201		ap_sub[8B3]
C138	CAP_201		ap_sub[8A3]
C139	CAP_201		ap_sub[8B2]
C140	CAP_402-LF		ap_sub[8A2]
C141	CAP_201		ap_sub[8A2]
C142	CAP_603		ap_sub[9C8]
C143	CAP_201		ap_sub[9C8]
C144	CAP_P_CASE-B3-SM1		ap_sub[9D8]
C145	CAP_201		ap_sub[9D8]
C146	CAP_201		ap_sub[9C7]
C147	CAP_402		ap_sub[9C7]
C148	CAP_603		ap_sub[9D7]
C149	CAP_201		ap_sub[9C7]
C150	CAP_402		ap_sub[9D7]
C151	CAP_201		ap_sub[9A7]
C152	CAP_603		ap_sub[9D7]
C153	CAP_603		ap_sub[9C7]
C154	CAP_201		ap_sub[9D6]
C155	CAP_201		ap_sub[9A6]
C156	CAP_201		ap_sub[9D5]
C157	CAP_805		ap_sub[9A5]
C158	CAP_402		ap_sub[9B4]
C159	CAP_201		ap_sub[9A4]
C160	CAP_402		ap_sub[9B4]
C161	CAP_402		ap_sub[9B4]
C162	CAP_603		ap_sub[9C4]
C163	CAP_603		ap_sub[9A4]
C164	CAP_201		ap_sub[9C3]
C165	CAP_402		ap_sub[9B3]
C166	CAP_603		ap_sub[9C3]
C167	CAP_402		ap_sub[9B3]
C168	CAP_201		ap_sub[9C3]
C169	CAP_201		ap_sub[9A3]
C170	CAP_402		ap_sub[9B3]
C171	CAP_603		ap_sub[14B7]
C172	CAP_402		ap_sub[9B2]
C173	CAP_603		ap_sub[14B7]
C174	CAP_402		ap_sub[9B2]
C175	CAP_603		ap_sub[9B2]
C176	CAP_402		ap_sub[9B2]
C177	CAP_402		ap_sub[9C1]
C178	CAP_402		ap_sub[9C1]
C179	CAP_402		ap_sub[9B1]
C180	CAP_402		ap_sub[9B1]
C181	CAP_402		ap_sub[9B1]
C182	CAP_402		ap_sub[9B1]
C183	CAP_402		ap_sub[9A1]
C184	CAP_402		ap_sub[9C1]
C185	CAP_402-LF		ap_sub[10C7]
C186	CAP_201		ap_sub[10C7]
C187	CAP_201		ap_sub[10D6]
C188	CAP_201		ap_sub[10D3]
C189	CAP_402-LF		ap_sub[10B3]
C190	CAP_402-LF		ap_sub[10B2]
C191	CAP_402-LF		ap_sub[10B1]
C192	CAP_201		ap_sub[12B6]
C193	CAP_201		ap_sub[14B7]
C194	CAP_201		ap_sub[12C3]
C195	CAP_201		ap_sub[12B7]
C196	CAP_201		ap_sub[12C4]
C197	CAP_201		ap_sub[14B6]
C198	CAP_402-LF		ap_sub[13C8]
C199	CAP_603		ap_sub[13A8]
C200	CAP_201		ap_sub[13C8]
C201	CAP_603		ap_sub[13A8]
C202	CAP_201		ap_sub[13A7]
C203	CAP_201		ap_sub[13C7]
C204	CAP_201		ap_sub[13A7]
C205	CAP_402		ap_sub[13D7]
C206	CAP_402		ap_sub[13C7]
C207	CAP_201		ap_sub[13B6]
C208	CAP_402		ap_sub[13B6]
C209	CAP_201		ap_sub[13B6]
C210	CAP_402-LF		ap_sub[13B6]
C211	CAP_201		ap_sub[13B6]
C212	CAP_402-LF		ap_sub[13B5]
C213	CAP_201		ap_sub[13B5]
C214	CAP_201		ap_sub[13C1]
C215	CAP_201		ap_sub[15D7]
C216	CAP_201		ap_sub[15D7]
C217	CAP_201		ap_sub[15D5]
C218	CAP_201		ap_sub[15D5]
C219	CAP_201		ap_sub[15D2]
C220	CAP_201		ap_sub[15C2]
C221	CAP_201		ap_sub[16C4]
C222	CAP_402-1		ap_sub[16C4]
C223	CAP_201		ap_sub[12B8]
C224	CAP_201	TP18	ap_sub[TP25-TOP]
C225	CAP_201		ap_sub[12B5]
C226	CAP_201		ap_sub[12B5]
C227	CAP_201		ap_sub[12B4]
D1	DIODE_SCHOT_SM		ap_sub[9D6]
D2	DIODE_SCHOT_2P_SOD-923-HF		ap_sub[10B2]
DZ1	SUPPR_TRANSIENT1_201		ap_sub[12B3]
DZ2	SUPPR_TRANSIENT1_201		ap_sub[12B3]
DZ3	SUPPR_TRANSIENT1_201		ap_sub[7B2]
DZ4	SUPPR_TRANSIENT1_201		ap_sub[7B2]
DZ5	SUPPR_TRANSIENT1_201		ap_sub[8B5]
DZ6	SUPPR_TRANSIENT1_201		ap_sub[8B4]
DZ7	SUPPR_TRANSIENT1_201		ap_sub[8D3]
DZ8	ZENER_GDZ-0201		ap_sub[9A8]
DZ9	SUPPR_TRANSIENT1_201		ap_sub[11C5]
DZ10	SUPPR_TRANSIENT1_201		ap_sub[11A4]
DZ11	SUPPR_TRANSIENT1_201		ap_sub[11A4]
DZ12	SUPPR_TRANSIENT1_201		ap_sub[11B4]
DZ13	SUPPR_TRANSIENT1_201		ap_sub[11C3]
DZ14	ZENER_GDZ-0201		ap_sub[10A7]
FL1	FILTER_2P_0402		ap_sub[12B7]
FL2	FILTER_2P_0201		ap_sub[2C7]
FL3	FILTER_2P_0201		ap_sub[2D7]
FL4	FILTER_2P_0201		ap_sub[2C2]
FL5	FILTER_2P_0201		ap_sub[2C2]
FL6	FILTER_2P_0201		ap_sub[7D7]
FL7	FILTER_2P_0201		ap_sub[7D3]
FL8	FILTER_2P_0201		ap_sub[7C3]
FL9	FILTER_2P_0402		ap_sub[8C5]
FL10	FILTER_2P_0402		ap_sub[8C5]
FL11	FILTER_2P_0201		ap_sub[8D4]
FL12	FILTER_2P_0201		ap_sub[8C4]
FL13	FILTER_2P_0201		ap_sub[10C7]
FL14	FILTER_2P_0201		ap_sub[12B7]
FL15	FILTER_2P_0201		ap_sub[12A7]
FL16	FILTER_2P_0201		ap_sub[12A7]
FL17	FILTER_2P_0201		ap_sub[12A7]
FL18	FILTER_2P_0201		ap_sub[12C2]
FL19	FILTER_2P_0402		ap_sub[12B2]
FL20	FILTER_2P_0201		ap_sub[12C7]
FL21	FILTER_2P_0201		ap_sub[8D3]
FL22	FILTER_2P_0201		ap_sub[12A4]
FL23	FILTER_2P_0201		ap_sub[12A4]
FL24	FILTER_2P_0201		ap_sub[12A4]
FL25	FILTER_2P_0201		ap_sub[12A4]
FL27	FILTER_2P_0402		ap_sub[12B7]
J1	CON_M10ST_D4MT_SM_M-ST-SM		ap_sub[8D2]
J2	CON_F24ST_SDCARD_SM_F-ST-SM		ap_sub[10D8]
J3	CON_M42ST_D4MT_SM_M-ST-SM		ap_sub[12C4]
J4	CON_M20ST_D4MT_SM_M-ST-SM		ap_sub[13A6]
J5	CON_M30ST_D4MT_SM_M-ST-SM		ap_sub[13D2]
J6	CON_M20ST_D4MT_SM_M-ST-SM		ap_sub[14C5]
J7	CON_F12RT_D_SM1_F-RT-SM-HF		ap_sub[16C5]
L1	FILTER_4P_TCM1005		ap_sub[12B1]
L2	IND_VLS4012-SM		ap_sub[9D6]
L4	IND_VLS3012-SM-HF		ap_sub[9C4]
L5	IND_VLS3012-SM-HF		ap_sub[9C4]
L6	IND_VLS3012-SM-HF		ap_sub[9A4]
L7	IND_LQH2MC-SM		ap_sub[10B2]
Q1	TRA_NCH_SCHOT_6P_WDFN		ap_sub[9A5 9A5]
Q2	TRA_SI8409DB_BGA		ap_sub[10B7]
Q3	TRA_MOSFET_NCHN_3P_SOT883L		ap_sub[10D6]
Q4	TRA_SI8409DB_BGA		ap_sub[10B6]
Q5	TRA_NCH_SCHOT_6P_WDFN		ap_sub[10C3 10D3]
Q6	TRA_DUAL_NPCH_NTUD3127C1_SOT-963		ap_sub[10B3 10B1]
R1	RES_201		ap_sub[2C7]
R2	RES_201		ap_sub[8C6]
R3	RES_201		ap_sub[8C6]
R4	RES_201		ap_sub[9C8]
R5	RES_201		ap_sub[2B8]
R6	RES_201		ap_sub[2A7]
R7	RES_402-1		ap_sub[2A7]
R8	RES_201		ap_sub[2B7]
R9	RES_402-1		ap_sub[2A7]
R10	RES_201		ap_sub[2C6]
R11	RES_201		ap_sub[2A6]
R12	RES_201		ap_sub[2C2]
R13	RES_201		ap_sub[2C2]
R14	RES_201		ap_sub[2C2]
R15	RES_201		ap_sub[2B2]
R16	RES_201		ap_sub[2B2]
R17	RES_201		ap_sub[3B5]
R18	RES_201		ap_sub[3C4]
R19	RES_201		ap_sub[4C6]
R20	RES_201		ap_sub[4D6]
R21	RES_201		ap_sub[4D5]
R22	RES_201		ap_sub[4D5]
R23	RES_201		ap_sub[4D5]
R24	RES_201		ap_sub[4B4]
R25	RES_201		ap_sub[4B4]
R26	RES_201		ap_sub[4B2]
R27	RES_201		ap_sub[5B8]
R28	RES_201		ap_sub[5C8]
R29	RES_201		ap_sub[5C8]
R30	RES_201		ap_sub[5C8]
R31	RES_201		ap_sub[5A6]
R32	RES_201		ap_sub[5B5]
R33	RES_201		ap_sub[5C3]
R34	RES_201		ap_sub[5C3]
R35	RES_201		ap_sub[5C3]
R36	RES_201		ap_sub[5C3]
R37	RES_201		ap_sub[5C3]
R38	RES_201		ap_sub[5B3]
R39	RES_201		ap_sub[5B3]
R40	RES_201		ap_sub[5B3]
R41	RES_201		ap_sub[6C6]
R42	RES_201		ap_sub[6C6]
R43	RES_201		ap_sub[6B6]
R44	RES_201		ap_sub[6B4]
R45	RES_201		ap_sub[6B4]
R46	RES_201		ap_sub[6B4]
R47	RES_201		ap_sub[6B4]
R49	RES_201		ap_sub[7A8]
R50	RES_201		ap_sub[7A7]
R51	RES_201		ap_sub[7A7]
R52	RES_201		ap_sub[7C7]
R53	RES_201		ap_sub[7C7]
R54	RES_201		ap_sub[7B6]
R55	RES_201		ap_sub[7A4]
R56	RES_201		ap_sub[7A3]
R57	RES_201		ap_sub[7A3]
R58	RES_201		ap_sub[7A3]
R59	RES_201		ap_sub[7C3]
R60	RES_201		ap_sub[7B3]
R61	RES_201		ap_sub[7C3]
R62	RES_201		ap_sub[7B3]
R63	RES_201		ap_sub[7C1]
R64	RES_201		ap_sub[7C1]
R65	RES_201		ap_sub[8B8]
R66	RES_201		ap_sub[8B7]
R67	RES_201		ap_sub[8B7]
R68	RES_201		ap_sub[8D7]
R69	RES_201		ap_sub[8B6]
R70	RES_201		ap_sub[8D6]
R71	RES_201		ap_sub[8D6]
R72	RES_201		ap_sub[8C6]
R73	RES_201		ap_sub[8D6]
R74	RES_201		ap_sub[8B4]
R75	RES_201		ap_sub[8B3]
R76	RES_201		ap_sub[8B3]
R77	RES_201		ap_sub[8C3]
R78	RES_201		ap_sub[8A2]
R79	RES_201		ap_sub[9B8]
R80	RES_201		ap_sub[9B8]
R81	RES_201		ap_sub[9C8]
R82	RES_201		ap_sub[9B8]
R83	RES_201		ap_sub[9A8]
R84	RES_201		ap_sub[9B8]
R85	RES_201		ap_sub[9A8]
R86	RES_201		ap_sub[9B8]
R87	RES_201		ap_sub[9C8]
R88	RES_201		ap_sub[9C7]
R89	RES_201		ap_sub[9A7]
R90	RES_201		ap_sub[9A6]
R91	RES_201		ap_sub[9A6]
R92	RES_201		ap_sub[9A6]
R93	RES_402		ap_sub[9A6]
R94	RES_201		ap_sub[9A5]
R95	RES_201		ap_sub[9C4]
R96	RES_201		ap_sub[9A4]
R97	RES_201		ap_sub[9A4]
R98	RES_402		ap_sub[9A3]
R99	RES_402		ap_sub[9C1]
R100	RES_402		ap_sub[9B1]
R101	RES_402		ap_sub[9A1]
R102	RES_402		ap_sub[9C1]
R103	RES_402		ap_sub[9C1]
R104	RES_402		ap_sub[9B1]
R105	RES_402		ap_sub[9B1]
R106	RES_402		ap_sub[9C1]
R107	RES_201		ap_sub[11C4]
R108	RES_201		ap_sub[11A4]
R109	RES_201		ap_sub[11B4]
R110	RES_201		ap_sub[11C3]
R111	RES_201		ap_sub[11B3]
R112	RES_201		ap_sub[10D8]
R113	RES_201		ap_sub[10A7]
R114	RES_201		ap_sub[10D6]
R115	RES_201		ap_sub[10A6]
R116	RES_201		ap_sub[10C4]
R117	RES_201		ap_sub[10A3]
R118	RES_201		ap_sub[10B3]
R119	RES_201		ap_sub[10B2]
R120	RES_201		ap_sub[10B2]
R121	RES_201		ap_sub[10B1]
R122	RES_201		ap_sub[12B8]
R123	RES_201		ap_sub[12A8]
R124	RES_201		ap_sub[14C3]
R125	RES_201		ap_sub[12A4]
R126	RES_201		ap_sub[12B3]
R127	RES_201		ap_sub[12C2]
R128	RES_201		ap_sub[13D8]
R129	RES_201		ap_sub[13C7]
R130	RES_201		ap_sub[13A5]
R131	RES_201		ap_sub[13A5]
R132	RES_201		ap_sub[13A5]
R133	RES_201		ap_sub[13B5]
R134	RES_201		ap_sub[13C4]
R135	RES_201		ap_sub[13D4]
R136	RES_201		ap_sub[13D4]
R137	RES_201		ap_sub[13C4]
R138	RES_201		ap_sub[13D4]
R139	RES_201		ap_sub[13C4]
R140	RES_201		ap_sub[13D4]
R141	RES_201		ap_sub[13C3]
R142	RES_201		ap_sub[13C2]
R143	RES_201		ap_sub[13B2]
R144	RES_201		ap_sub[13C2]
R145	RES_201		ap_sub[13B2]
R146	RES_201		ap_sub[13C2]
R147	RES_201		ap_sub[13C2]
R148	RES_201		ap_sub[15D6]
R149	RES_201		ap_sub[15D4]
R150	RES_201		ap_sub[15C3]
R151	RES_201		ap_sub[15D3]
R152	RES_201		ap_sub[15D3]
R153	RES_201		ap_sub[12C2]
RP1	RPAK4P_4X0201-HF		ap_sub[2B8]
TP1	TP_SM-TP25-TOP		ap_sub[2C2]
TP2	TP_SM-TP25-TOP		ap_sub[2C2]
TP3	TP_SM-TP25-TOP		ap_sub[3C8]
TP4	TP_SM-TP25-TOP		ap_sub[3B8]
TP5	TP_SM-TP25-TOP		ap_sub[3C5]
TP6	TP_SM-TP25-TOP		ap_sub[3B5]
TP7	TP_SM-TP25-TOP		ap_sub[3B5]
TP8	TP_SM-TP25-TOP		ap_sub[3B5]
TP9	TP_SM-TP25-TOP		ap_sub[3B5]
TP10	TP_SM-TP25-TOP		ap_sub[3B3]
TP11	TP_SM-TP25-TOP		ap_sub[3B3]
TP12	TP_SM-TP25-TOP		ap_sub[3B3]
TP13	TP_SM-TP25-TOP		ap_sub[3B3]
TP14	TP_SM-TP25-TOP		ap_sub[3B3]
TP15	TP_SM-TP25-TOP		ap_sub[3B3]
TP16	TP_SM-TP25-TOP		ap_sub[3B3]
TP17	TP_SM-TP25-TOP		ap_sub[3B3]
TP19	TP_SM-TP25-TOP		ap_sub[3B3]
TP20	TP_SM-TP25-TOP		ap_sub[3B3]
TP21	TP_SM-TP25-TOP		ap_sub[3B3]
TP22	TP_SM-TP25-TOP		ap_sub[3B3]
TP23	TP_SM-TP25-TOP		ap_sub[3B3]
TP24	TP_SM-TP25-TOP		ap_sub[3B3]
TP25	TP_SM-TP25-TOP		ap_sub[3B3]
TP26	TP_SM-TP25-TOP		ap_sub[3B3]
TP27	TP_SM-TP25-TOP		ap_sub[3B3]
TP28	TP_SM-TP25-TOP		ap_sub[3A3]
TP29	TP_SM-TP25-TOP		ap_sub[3A3]
TP30	TP_SM-TP25-TOP		ap_sub[3A3]
TP31	TP_SM-TP25-TOP		ap_sub[4D6]
U1	SC58720X02_FBGA		ap_sub[2C6]
U1	SC58720X02_FBGA		ap_sub[3B4 3D3 3D6]
U1	SC58720X02_FBGA		ap_sub[4D8]
U1	SC58720X02_FBGA		ap_sub[5C6]
U2	D1755AA_UFNBA		ap_sub[9D6]
U3	LIS331DL_LGA		ap_sub[10C6]

U4	74LVC2G04_SOT891	ap_sub[13B5]
U5	74LVC2G04_SOT891	ap_sub[14C3]
U6	74LVC1G08GF_SOT891	ap_sub[2C8]
U7	74AUP1T97_SOT891	ap_sub[2C7]
U8	FLASH_AT25DF081_DFN	ap_sub[4B4]
U9	ISL59121_WLCSP9	ap_sub[6C4]
U10	CS42L61_WLCSP66	ap_sub[7C5]
U11	CD3272_WCSP9	ap_sub[8A3]
U12	74LVC1G08GF_SOT891	ap_sub[9A7]
U13	74LVC1G08GF_SOT891	ap_sub[9A7]
U14	74LVC2G04_SOT891	ap_sub[11A4 11A3]
U15	SUPPR_NUP412VP5_SOT953	ap_sub[10D5]
U16	DCDC_LM2705_USMD	ap_sub[10B2]
U17	FLASH_16GX8_52LGA1_LGA	ap_sub[4B6]
U19	NIMBUS1_BGA	ap_sub[13D6]
U20	74AUP2G125_SOT833	ap_sub[15D7]
U21	74AUP2G126_SOT833	ap_sub[15D7]
U22	74AUP2G125_SOT833	ap_sub[15D5]
U23	74AUP2G126_SOT833	ap_sub[15D5]
U24	74LVC1G157_SOT891	ap_sub[15C3]
U25	74LVC1G157_SOT891	ap_sub[15D3]
XW1	SHORT_SM	ap_sub[2B7]
XW3	SHORT_SM	ap_sub[5A7]
XW5	SHORT_SM	ap_sub[9A6]
XW6	SHORT_SM	ap_sub[9A5]
XW7	SHORT_SM	ap_sub[9A5]
XW8	SHORT_SM	ap_sub[9C5]
XW10	SHORT_SM	ap_sub[9A4]
XW11	SHORT_SM	ap_sub[12A4]
XW12	SHORT_SM	ap_sub[15B8]
XW13	SHORT_SM	ap_sub[15B8]
Y1	CRYSTAL_4PIN_SM-2	ap_sub[2A6]
Y2	CRYSTAL_3.2X1.5X.6-SM	ap_sub[9D6]

Title: Basenet Report
Design: mlb
Date: Feb 4 16:23:15 2008

Base nets and synonyms for p4c_dev_lib.MLB(@p4c_dev_lib.mlb(sch_1))

Base Signal	Synonyms	Location([Zone][dir])
+1.8V_ANALOG	+1.8V_ANALOG - @p4c_dev_lib.MLB	7D2
+1.8V_ANALOG_SRC	+1.8V_ANALOG_SRC - @p4c_dev_lib.MLB	7D2
+1.8V_LED	+1.8V_LED - @p4c_dev_lib.MLB	15B6
+1.8V_LED_D	+1.8V_LED_D - @p4c_dev_lib.MLB	15B6
18V_FB	18V_FB - @p4c_dev_lib.MLB	17A7
18V_SW	18V_SW - @p4c_dev_lib.MLB	17A7
24M_O	24M_O - @p4c_dev_lib.MLB	2A6
A2P_01	A2P_01 - @p4c_dev_lib.MLB	22D6
A2P_02	A2P_02 - @p4c_dev_lib.MLB	22D5
ACCEL_INT1_N	ACCEL_INT1_N - @p4c_dev_lib.MLB	5D5 13B7
	RGB<23..0> - @p4c_dev_lib.MLB	5D5
ACCEL_INT2_N	ACCEL_INT2_N - @p4c_dev_lib.MLB	5D5 13B7
	RGB<23..0> - @p4c_dev_lib.MLB	5D5
ACCID	ACCID - @p4c_dev_lib.MLB	11A6 11C7
ACC_DETECT*	ACC_DETECT* - @p4c_dev_lib.MLB	11C8 14B5 14D4
ACC_DETECT_R_N	ACC_DETECT_R_N - @p4c_dev_lib.MLB	11C7
ACC_IDENTIFY	ACC_IDENTIFY - @p4c_dev_lib.MLB	11A5 12B4 14C4 14D3
ACC_TO_POD_AP	ACC_TO_POD_AP - @p4c_dev_lib.MLB	2C7 20C6
ACC_TO_POD_DOCK	ACC_TO_POD_DOCK - @p4c_dev_lib.MLB	14B6 20D6
ACC_TO_POD_DOCK_CONN	ACC_TO_POD_DOCK_CONN -	14B3 14D2 22C6 22D7
	@p4c_dev_lib.MLB	
ACC_TO_POD_MAX3232	ACC_TO_POD_MAX3232 -	22C7
	@p4c_dev_lib.MLB	
ADC_IN7	ADC_IN7 - @p4c_dev_lib.MLB	11A3 11C7
ADC_REF	ADC_REF - @p4c_dev_lib.MLB	11A6 11C7
AFILTA	AFILTA - @p4c_dev_lib.MLB	7B4
AFILTB	AFILTB - @p4c_dev_lib.MLB	7B4
AFILTC	AFILTC - @p4c_dev_lib.MLB	7B4
AIN2A	AIN2A - @p4c_dev_lib.MLB	7B4
AIN2A_REF	AIN2A_REF - @p4c_dev_lib.MLB	7B4
AIN2B	AIN2B - @p4c_dev_lib.MLB	7B4
AIN2B_REF	AIN2B_REF - @p4c_dev_lib.MLB	7B4
ALS_INT_N	ALS_INT_N - @p4c_dev_lib.MLB	2B3 23D8
	ALS_INT_ONBOARD - @p4c_dev_lib.MLB	23A6 23D7
ANA_VQ	ANA_VQ - @p4c_dev_lib.MLB	7B4
AP_DETECT_N	AP_DETECT_N - @p4c_dev_lib.MLB	29B8
AP_GRAPE_CS_N	AP_GRAPE_CS_N - @p4c_dev_lib.MLB	4C1 12D8
	SPI1_CS_N - @p4c_dev_lib.MLB	4C2 4D2 5B6
AP_GRAPE_HOST_INT_N	AP_GRAPE_HOST_INT_N -	3C5 12C8 15C4
	@p4c_dev_lib.MLB	
AP_GRAPE_MISO	AP_GRAPE_MISO - @p4c_dev_lib.MLB	4C1 12D8
	N72_SPI_DO - @p4c_dev_lib.MLB	4C1 17D2
	SPI1_MISO - @p4c_dev_lib.MLB	4C2 4D2 5B6
	N72_SPI_DO - @p4c_dev_lib.MLB	4C1 17D2
AP_GRAPE_MOSI	AP_GRAPE_MOSI - @p4c_dev_lib.MLB	4C1 12D8
	N72_SPI_DI - @p4c_dev_lib.MLB	4C1 17D2
	SPI1_MOSI - @p4c_dev_lib.MLB	4C2 4D2 5B6
	N72_SPI_DI - @p4c_dev_lib.MLB	4C1 17D2
AP_GRAPE_SCLK	AP_GRAPE_SCLK - @p4c_dev_lib.MLB	4C1 12D8
	N72_SPI_CLK - @p4c_dev_lib.MLB	4C1 17D2
	SPI1_SCLK - @p4c_dev_lib.MLB	4C2 4D2 5B6
	N72_SPI_CLK - @p4c_dev_lib.MLB	4C1 17D2
AP_PMU_EXTON	AP_PMU_EXTON - @p4c_dev_lib.MLB	11B8 20B6 26B7
AP_TCK	AP_TCK - @p4c_dev_lib.MLB	2B8 20C5
AP_TDI	AP_TDI - @p4c_dev_lib.MLB	2B8 20C5
AP_UART1_CTS_N	AP_UART1_CTS_N - @p4c_dev_lib.MLB	3C5 22C3
AP_UART1_RTS_N	AP_UART1_RTS_N - @p4c_dev_lib.MLB	3C5 22C3
AP_UART1_RXD	AP_UART1_RXD - @p4c_dev_lib.MLB	3C5 22D3
AP_UART1_TXD	AP_UART1_TXD - @p4c_dev_lib.MLB	3C5 22C3
AP_UART2_RXD	AP_UART2_RXD - @p4c_dev_lib.MLB	2C8 22D1
AP_UART2_RXD_3V0	AP_UART2_RXD_3V0 - @p4c_dev_lib.MLB	2B7
AP_UART2_TXD	AP_UART2_TXD - @p4c_dev_lib.MLB	2C8 22D1
AP_UART2_TXD_3V0	AP_UART2_TXD_3V0 - @p4c_dev_lib.MLB	2B7
AP_UART3_CTS_N	AP_UART3_CTS_N - @p4c_dev_lib.MLB	3C5 22A3
AP_UART3_RTS_N	AP_UART3_RTS_N - @p4c_dev_lib.MLB	3C5 22A3
AP_UART3_RXD	AP_UART3_RXD - @p4c_dev_lib.MLB	3C5 22B3
AP_UART3_TXD	AP_UART3_TXD - @p4c_dev_lib.MLB	3C5 22B3
ARM_REF	ARM_REF - @p4c_dev_lib.MLB	25D5
ARM_RTCK	ARM_RTCK - @p4c_dev_lib.MLB	2B7 14C3 25D6
AUDIO_VIDEO_RET	AUDIO_VIDEO_RET - @p4c_dev_lib.MLB	14B5
AUDIO_VIDEO_RET_CONN	AUDIO_VIDEO_RET_CONN -	14A5 14B3 14B3
	@p4c_dev_lib.MLB	
AUD_I2S_BITCLK_1817	AUD_I2S_BITCLK_1817 -	8B4 12B8
	@p4c_dev_lib.MLB	
AUD_I2S_BITCLK_L61	AUD_I2S_BITCLK_L61 -	7C6 12B8
	@p4c_dev_lib.MLB	
AUD_I2S_LRC_1817	AUD_I2S_LRC_1817 - @p4c_dev_lib.MLB	8B4 12B8
AUD_I2S_LRC_L61	AUD_I2S_LRC_L61 - @p4c_dev_lib.MLB	7C6 12B8
AUD_I2S_SDIN_1817	AUD_I2S_SDIN_1817 -	8B4 12B8
	@p4c_dev_lib.MLB	
AUD_I2S_SDIN_L61	AUD_I2S_SDIN_L61 - @p4c_dev_lib.MLB	7C6 12B8
AUD_I2S_SDOUT_1817	AUD_I2S_SDOUT_1817 -	8B6 12B8
	@p4c_dev_lib.MLB	
AUD_I2S_SDOUT_L61	AUD_I2S_SDOUT_L61 -	7C6 12B8
	@p4c_dev_lib.MLB	
AUD_MCLK_1817	AUD_MCLK_1817 - @p4c_dev_lib.MLB	8B6 12B8
AUD_MCLK_L61	AUD_MCLK_L61 - @p4c_dev_lib.MLB	7C6 7C8 12B8
AUD_MCLK_L61_RR	AUD_MCLK_L61_RR - @p4c_dev_lib.MLB	7D8
AV_RET_SENSE	AV_RET_SENSE - @p4c_dev_lib.MLB	14A5
AV_RET_SENSE_1817	AV_RET_SENSE_1817 -	8A7 14A5
	@p4c_dev_lib.MLB	
BATSNS	BATSNS - @p4c_dev_lib.MLB	11B7 20B7
BATT_EXTERNAL	BATT_EXTERNAL - @p4c_dev_lib.MLB	15A8 24C1 24D2 24D3
BATT_EXTERNAL_D	BATT_EXTERNAL_D - @p4c_dev_lib.MLB	15B8
BATT_EXTERNAL_LED	BATT_EXTERNAL_LED -	15B8
	@p4c_dev_lib.MLB	
BATT_RADIO	BATT_RADIO - @p4c_dev_lib.MLB	20B4 20B5 24C2
BATT_RADIO_N	BATT_RADIO_N - @p4c_dev_lib.MLB	20B8 26D4
BATT_RADIO_P	BATT_RADIO_P - @p4c_dev_lib.MLB	20B8 26D3 26D5
BATT_RADIO_P_J	BATT_RADIO_P_J - @p4c_dev_lib.MLB	26D2
BATT_TEMP	BATT_TEMP - @p4c_dev_lib.MLB	24C2
BATT_VCC_CURSNS	BATT_VCC_CURSNS - @p4c_dev_lib.MLB	8C3 11B7 20B8 24C1
BATT_VCC_CURSNS_1817	BATT_VCC_CURSNS_1817 -	8C5
	@p4c_dev_lib.MLB	
BB_I2S_BCLK	BB_I2S_BCLK - @p4c_dev_lib.MLB	12A8 20A6 29D1
BB_I2S_CLK_3V3	BB_I2S_CLK_3V3 - @p4c_dev_lib.MLB	29B6 29C8 29D3
BB_I2S_DIN	BB_I2S_DIN - @p4c_dev_lib.MLB	12A8 20A6 29C1
BB_I2S_DOUT	BB_I2S_DOUT - @p4c_dev_lib.MLB	12A8 20A6 29D1
BB_I2S_LRCLK	BB_I2S_LRCLK - @p4c_dev_lib.MLB	12A8 20A6 29B1
BB_I2S_RX_3V3	BB_I2S_RX_3V3 - @p4c_dev_lib.MLB	28A6 29B8 29C3 29C8
BB_I2S_TX_3V3	BB_I2S_TX_3V3 - @p4c_dev_lib.MLB	28B6 29D3
BB_I2S_WA0_3V3	BB_I2S_WA0_3V3 - @p4c_dev_lib.MLB	29B3 29B6 29C8
BB_PMU_ON*	BB_PMU_ON* - @p4c_dev_lib.MLB	11B8 11B8 15A5 20B7 26B7
		29A3
BB_PMU_ON_3V3*	BB_PMU_ON_3V3* - @p4c_dev_lib.MLB	29A5 29C6
BB_PMU_ON_GATE_D	BB_PMU_ON_GATE_D - @p4c_dev_lib.MLB	15B5
BB_PMU_ON_GATE_LED	BB_PMU_ON_GATE_LED -	15B5

	@p4c_dev_lib.MLB	
BB_RST	BB_RST - @p4c_dev_lib.MLB	2C3 20B6 26B7 29A1
BB_RST_3V3	BB_RST_3V3 - @p4c_dev_lib.MLB	29B3 29C6
BB_RTCK	BB_RTCK - @p4c_dev_lib.MLB	20B5 25D4 25D8
BB_TCK	BB_TCK - @p4c_dev_lib.MLB	20B4 25D2 25D4 25D8
BB_TDI	BB_TDI - @p4c_dev_lib.MLB	20B5 25D4 25D8
BB_TDO	BB_TDO - @p4c_dev_lib.MLB	20B5 25D4 25D8
BB_TMS	BB_TMS - @p4c_dev_lib.MLB	20B5 25D4 25D8
BB_TRST_N	BB_TRST_N - @p4c_dev_lib.MLB	20B5 25D4 25D8
BB_USART0_CTS_N_CONN	BB_USART0_CTS_N_CONN -	20B6 20C4
	@p4c_dev_lib.MLB	
	UART1_RTS_N - @p4c_dev_lib.MLB	20C5 22C4
BB_USART0_RTS_N_CONN	BB_USART0_RTS_N_CONN -	20B7 20C4
	@p4c_dev_lib.MLB	
	UART1_CTS_N - @p4c_dev_lib.MLB	20C5 22C4
BB_USART0_RXD_CONN	BB_USART0_RXD_CONN -	20B6 20D2
	@p4c_dev_lib.MLB	
BB_USART0_RXD_CTRL	BB_USART0_RXD_CTRL -	5D4 20D4
	@p4c_dev_lib.MLB	
	RGB<23..0> - @p4c_dev_lib.MLB	5D5
BB_USART0_TXD_CONN	BB_USART0_TXD_CONN -	20B6 20C4 20D8
	@p4c_dev_lib.MLB	
	UART1_RXD - @p4c_dev_lib.MLB	20C5 22C4 22D4
BL_BOOST_N	BL_BOOST_N - @p4c_dev_lib.MLB	11A4 26C4
BL_BOOST_P	BL_BOOST_P - @p4c_dev_lib.MLB	11A4 26C5
BOARD_ID0	BOARD_ID0 - @p4c_dev_lib.MLB	5A5 5D5
	RGB<23..0> - @p4c_dev_lib.MLB	5D5
BOARD_ID0_PD	BOARD_ID0_PD - @p4c_dev_lib.MLB	5A5
BOARD_ID1	BOARD_ID1 - @p4c_dev_lib.MLB	5A5 5D5
	RGB<23..0> - @p4c_dev_lib.MLB	5D5
BOARD_ID1_PD	BOARD_ID1_PD - @p4c_dev_lib.MLB	5A5
BOARD_ID2	BOARD_ID2 - @p4c_dev_lib.MLB	5A5 5D5
	RGB<23..0> - @p4c_dev_lib.MLB	5D5
BOARD_ID2_PD	BOARD_ID2_PD - @p4c_dev_lib.MLB	5A5
BOARD_ID3	BOARD_ID3 - @p4c_dev_lib.MLB	5A5 5D5
	RGB<23..0> - @p4c_dev_lib.MLB	5D5
BOARD_ID3_PD	BOARD_ID3_PD - @p4c_dev_lib.MLB	5A5
BOOST_PROT	BOOST_PROT - @p4c_dev_lib.MLB	11A4 11B5
BOOST_SENSE_N	BOOST_SENSE_N - @p4c_dev_lib.MLB	11A4 11B5
BOOST_SENSE_P	BOOST_SENSE_P - @p4c_dev_lib.MLB	11A4 11B5
BOOT_CFG_0	BOOT_CFG_0 - @p4c_dev_lib.MLB	16C7 16D5
BOOT_CFG_1	BOOT_CFG_1 - @p4c_dev_lib.MLB	16C7 16D5
BOOT_STRAP0	BOOT_STRAP0 - @p4c_dev_lib.MLB	5A5 5D5
	RGB<23..0> - @p4c_dev_lib.MLB	5D5
BOOT_STRAP0_PD	BOOT_STRAP0_PD - @p4c_dev_lib.MLB	5A5
BOOT_STRAP1	BOOT_STRAP1 - @p4c_dev_lib.MLB	5A5 5D5
	RGB<23..0> - @p4c_dev_lib.MLB	5D5
BOOT_STRAP1_PD	BOOT_STRAP1_PD - @p4c_dev_lib.MLB	5A5
BOOT_STRAP2	BOOT_STRAP2 - @p4c_dev_lib.MLB	5A5 5D5
	RGB<23..0> - @p4c_dev_lib.MLB	5D5
BOOT_STRAP2_PD	BOOT_STRAP2_PD - @p4c_dev_lib.MLB	5A5
BOOT_STRAP3	BOOT_STRAP3 - @p4c_dev_lib.MLB	5A5 5D5
	RGB<23..0> - @p4c_dev_lib.MLB	5D5
BOOT_STRAP3_PD	BOOT_STRAP3_PD - @p4c_dev_lib.MLB	5A5
BST_SRC	BST_SRC - @p4c_dev_lib.MLB	11A5
BT_I2S_BCLK	BT_I2S_BCLK - @p4c_dev_lib.MLB	12D4 20A5
	L61_I2S_SCLK - @p4c_dev_lib.MLB	7B6 12A8 12D5
BT_I2S_DIN	BT_I2S_DIN - @p4c_dev_lib.MLB	12D4 20A5
	L61_I2S_SDIN - @p4c_dev_lib.MLB	7B6 12A8 12D5
BT_I2S_DOUT	BT_I2S_DOUT - @p4c_dev_lib.MLB	12D4 20A5
	L61_I2S_SDOUT - @p4c_dev_lib.MLB	7B6 12A8 12D5
BT_I2S_LRCLK	BT_I2S_LRCLK - @p4c_dev_lib.MLB	12D4 20A5
	L61_I2S_FSCK - @p4c_dev_lib.MLB	7B6 12A8 12D5
BT_RESET	BT_RESET - @p4c_dev_lib.MLB	3C5 20B7 26B6
BT_RESET_TRITON_3V3	BT_RESET_TRITON_3V3 -	29C8
	@p4c_dev_lib.MLB	
BT_UART_CTS_N	BT_UART_CTS_N - @p4c_dev_lib.MLB	20B7 20C6
	UART3_RTS_N - @p4c_dev_lib.MLB	20C7 22A4
BT_UART_RTS_N	BT_UART_RTS_N - @p4c_dev_lib.MLB	20B7 20C6
	UART3_CTS_N - @p4c_dev_lib.MLB	20C7 22A4
BT_UART_RXD	BT_UART_RXD - @p4c_dev_lib.MLB	20B7 20C6
	UART3_TXD - @p4c_dev_lib.MLB	20C7 22A4 22B4
BT_UART_TXD	BT_UART_TXD - @p4c_dev_lib.MLB	20B7 20C6
	UART3_RXD - @p4c_dev_lib.MLB	20C7 22A4 22B4
C1_N	C1_N - @p4c_dev_lib.MLB	22C8
C1_P	C1_P - @p4c_dev_lib.MLB	22C8
C2_N	C2_N - @p4c_dev_lib.MLB	22C8
C2_P	C2_P - @p4c_dev_lib.MLB	22C8
CC2	CC2 - @p4c_dev_lib.MLB	28A3
CC3	CC3 - @p4c_dev_lib.MLB	29A5
CEATAPI_CLK	CEATAPI_CLK - @p4c_dev_lib.MLB	4D6
CFSB	CFSB - @p4c_dev_lib.MLB	2B6
CIN	CIN - @p4c_dev_lib.MLB	6C4
CLK_32K_GRAPE	CLK_32K_GRAPE - @p4c_dev_lib.MLB	11A6 12D8
CLK_32K_GRAPE_NIMBUS	CLK_32K_GRAPE_NIMBUS -	12D8 16B4 16C7
	@p4c_dev_lib.MLB	
CLK_32K_GRAPE_Z2	CLK_32K_GRAPE_Z2 - @p4c_dev_lib.MLB	12C8 17B4 17B5
CLK_32K_M2	CLK_32K_M2 - @p4c_dev_lib.MLB	5C8 11A5
CLK_32K_M2_R	CLK_32K_M2_R - @p4c_dev_lib.MLB	11A6
CLK_32K_PMU	CLK_32K_PMU - @p4c_dev_lib.MLB	11A7 11A8 11B7 26B7
CODEC_3V_1817	CODEC_3V_1817 - @p4c_dev_lib.MLB	8C5 8D5
CODEC_3V_J	CODEC_3V_J - @p4c_dev_lib.MLB	26D2
CODEC_I2S_BCLK	CODEC_I2S_BCLK - @p4c_dev_lib.MLB	12B8 12D4
	I2S0_BCLK - @p4c_dev_lib.MLB	5C8 12A7 12D5
CODEC_I2S_DIN	CODEC_I2S_DIN - @p4c_dev_lib.MLB	12B8 12D4
	I2S0_DOUT - @p4c_dev_lib.MLB	5C8 12A7 12D5
CODEC_I2S_DOUT	CODEC_I2S_DOUT - @p4c_dev_lib.MLB	12B8 12D4
	I2S0_DIN - @p4c_dev_lib.MLB	5C8 12A7 12D5
CODEC_I2S_LRCLK	CODEC_I2S_LRCLK - @p4c_dev_lib.MLB	12B8 12D4
	I2S0_LRCLK - @p4c_dev_lib.MLB	5C8 12A7 12D5
CODEC_I2S_MCLK	CODEC_I2S_MCLK - @p4c_dev_lib.MLB	12B8 12D4
	I2S0_MCK - @p4c_dev_lib.MLB	5C8 12D5
CODEC_IRQ_AP_N	CODEC_IRQ_AP_N - @p4c_dev_lib.MLB	5D5 12A8
	RGB<23..0> - @p4c_dev_lib.MLB	5D5
CODEC_IRQ_N	CODEC_IRQ_N - @p4c_dev_lib.MLB	[illegible] 12A7 12B8
CODEC_L61_RET_SNS	CODEC_L61_RET_SNS -	7A6 14A5
	@p4c_dev_lib.MLB	
CODEC_LINEIN_N	CODEC_LINEIN_N - @p4c_dev_lib.MLB	8B8 20B8
CODEC_LINEIN_N_1817	CODEC_LINEIN_N_1817 -	8C6
	@p4c_dev_lib.MLB	
CODEC_LINEIN_P	CODEC_LINEIN_P - @p4c_dev_lib.MLB	8B8 20A8
CODEC_LINEIN_P_1817	CODEC_LINEIN_P_1817 -	8B6
	@p4c_dev_lib.MLB	
CODEC_LINEOUT_N	CODEC_LINEOUT_N - @p4c_dev_lib.MLB	8C1 20A8
CODEC_LINEOUT_P	CODEC_LINEOUT_P - @p4c_dev_lib.MLB	8C1 20A8
CODEC_LINE_OUT_L61_L	CODEC_LINE_OUT_L61_L -	7C4
	@p4c_dev_lib.MLB	
CODEC_LINE_OUT_L61_R	CODEC_LINE_OUT_L61_R -	7C4
	@p4c_dev_lib.MLB	
COUT	COUT - @p4c_dev_lib.MLB	6B5 6C5
COUT_SVID	COUT_SVID - @p4c_dev_lib.MLB	6B5
CPX0	CPX0 - @p4c_dev_lib.MLB	16D7
CPX1	CPX1 - @p4c_dev_lib.MLB	16C7
CPY0	CPY0 - @p4c_dev_lib.MLB	16D7

CPY1	CPY1 - @p4c_dev_lib.MLB	16C7
CSETN	CSETN - @p4c_dev_lib.MLB	28D6 29A6
CVBSIN	CVBSIN - @p4c_dev_lib.MLB	6C4
CVBS_OUT	CVBS_OUT - @p4c_dev_lib.MLB	6C5
DAC_COMP	DAC_COMP - @p4c_dev_lib.MLB	5B8
DAC_IREF	DAC_IREF - @p4c_dev_lib.MLB	5B8
DAC_OUT1	DAC_OUT1 - @p4c_dev_lib.MLB	5B8 6C3
DAC_OUT2	DAC_OUT2 - @p4c_dev_lib.MLB	5B8 6C3
DAC_OUT3	DAC_OUT3 - @p4c_dev_lib.MLB	5B8 6C3
DAC_VREF	DAC_VREF - @p4c_dev_lib.MLB	5B8
DATA<0>	DATA<0> - @p4c_dev_lib.MLB	28C6 29A8
DATA<1>	DATA<1> - @p4c_dev_lib.MLB	28C6 29A6
DATA<2>	DATA<2> - @p4c_dev_lib.MLB	28C6 29A8
DATA<3>	DATA<3> - @p4c_dev_lib.MLB	28C6 29A6
DATA<4>	DATA<4> - @p4c_dev_lib.MLB	28C6 29A8
DATA<5>	DATA<5> - @p4c_dev_lib.MLB	28C6 29A6
DATA<6>	DATA<6> - @p4c_dev_lib.MLB	28C6 29A8
DATA<7>	DATA<7> - @p4c_dev_lib.MLB	28C6 29A6
DATA<8>	DATA<8> - @p4c_dev_lib.MLB	28C6 29A8
DATA<9>	DATA<9> - @p4c_dev_lib.MLB	28C6 29A6
DATA<10>	DATA<10> - @p4c_dev_lib.MLB	28C6 29A8
DATA<11>	DATA<11> - @p4c_dev_lib.MLB	28C6 29A6
DATA<12>	DATA<12> - @p4c_dev_lib.MLB	28C6 29A8
DATA<13>	DATA<13> - @p4c_dev_lib.MLB	28B6 29A6
DATA<14>	DATA<14> - @p4c_dev_lib.MLB	28B6 29A8
DATA<15>	DATA<15> - @p4c_dev_lib.MLB	28B6 29A6
DATA<16>	DATA<16> - @p4c_dev_lib.MLB	28B6 29A6
DATA<17>	DATA<17> - @p4c_dev_lib.MLB	28B6 29A8
DATA<18>	DATA<18> - @p4c_dev_lib.MLB	28B6 29A6
DATA<19>	DATA<19> - @p4c_dev_lib.MLB	28B6 29A8
DATA<20>	DATA<20> - @p4c_dev_lib.MLB	28B6 29A6
DATA<21>	DATA<21> - @p4c_dev_lib.MLB	28B6 29A8
DATA<22>	DATA<22> - @p4c_dev_lib.MLB	28B6 29A6
DATA<23>	DATA<23> - @p4c_dev_lib.MLB	28B6 29A8
DATA<24>	DATA<24> - @p4c_dev_lib.MLB	28B6 29A6
DATA<25>	DATA<25> - @p4c_dev_lib.MLB	28B6 29A8
DATA<26>	DATA<26> - @p4c_dev_lib.MLB	28B6 29A6
DATA<27>	DATA<27> - @p4c_dev_lib.MLB	28B6 29A8
DATA<28>	DATA<28> - @p4c_dev_lib.MLB	28B6 29A6
DATA<29>	DATA<29> - @p4c_dev_lib.MLB	28B6 29A8
DATA<30>	DATA<30> - @p4c_dev_lib.MLB	28B6 29A6
DATA<31>	DATA<31> - @p4c_dev_lib.MLB	28B6 29A8
DB9_RX	DB9_RX - @p4c_dev_lib.MLB	22B8 22C7
DB9_TX	DB9_TX - @p4c_dev_lib.MLB	22B8 22C7
DBG_GPO5	DBG_GPO5 - @p4c_dev_lib.MLB	22A8 25B7 25C7
DBG_GPO5*	DBG_GPO5* - @p4c_dev_lib.MLB	25B6
DBG_GPO6	DBG_GPO6 - @p4c_dev_lib.MLB	25A6 25B7
DBG_LDO_4V_EN*	DBG_LDO_4V_EN* - @p4c_dev_lib.MLB	22A8 25B8 25C6
DBG_MENU	DBG_MENU - @p4c_dev_lib.MLB	22A8 25B8 25C6
DBG_PWR	DBG_PWR - @p4c_dev_lib.MLB	22A8 25B6 25C7
DBG_RST	DBG_RST - @p4c_dev_lib.MLB	22A8 25A8
DBG_SHDN	DBG_SHDN - @p4c_dev_lib.MLB	22A8 24B4 25C7
DBG_SHDN_A	DBG_SHDN_A - @p4c_dev_lib.MLB	24B4
DBG_VOL+	DBG_VOL+ - @p4c_dev_lib.MLB	22A8 25A7
DBG_VOL-	DBG_VOL- - @p4c_dev_lib.MLB	22A8 25A6
DDR_A0	DDR_A0 - @p4c_dev_lib.MLB	3B3
DDR_A1	DDR_A1 - @p4c_dev_lib.MLB	3B3
DDR_A2	DDR_A2 - @p4c_dev_lib.MLB	3B3
DDR_A3	DDR_A3 - @p4c_dev_lib.MLB	3B3
DDR_A4	DDR_A4 - @p4c_dev_lib.MLB	3B3
DDR_A5	DDR_A5 - @p4c_dev_lib.MLB	3B3
DDR_A6	DDR_A6 - @p4c_dev_lib.MLB	3B3
DDR_A7	DDR_A7 - @p4c_dev_lib.MLB	3B3
DDR_A8	DDR_A8 - @p4c_dev_lib.MLB	3B3
DDR_A9	DDR_A9 - @p4c_dev_lib.MLB	3B3
DDR_A10	DDR_A10 - @p4c_dev_lib.MLB	3B3
DDR_A11	DDR_A11 - @p4c_dev_lib.MLB	3B3
DDR_A12	DDR_A12 - @p4c_dev_lib.MLB	3B3
DDR_A13	DDR_A13 - @p4c_dev_lib.MLB	3B3
DDR_BA0	DDR_BA0 - @p4c_dev_lib.MLB	3B3
DDR_BA1	DDR_BA1 - @p4c_dev_lib.MLB	3B3
DDR_CAS_N	DDR_CAS_N - @p4c_dev_lib.MLB	3A3
DDR_CKE0	DDR_CKE0 - @p4c_dev_lib.MLB	3B3
DDR_CKE1	DDR_CKE1 - @p4c_dev_lib.MLB	3B3
DDR_DM0	DDR_DM0 - @p4c_dev_lib.MLB	3B4
DDR_DM1	DDR_DM1 - @p4c_dev_lib.MLB	3B4
DDR_DM2	DDR_DM2 - @p4c_dev_lib.MLB	3B4
DDR_DM3	DDR_DM3 - @p4c_dev_lib.MLB	3B4
DDR_RAS_N	DDR_RAS_N - @p4c_dev_lib.MLB	3A3
DDR_WE_N	DDR_WE_N - @p4c_dev_lib.MLB	3A3
DEBUG_RES	DEBUG_RES - @p4c_dev_lib.MLB	12B5
DEBUG_RST_N	DEBUG_RST_N - @p4c_dev_lib.MLB	20B5 25D3 25D8
DEBUG_SW	DEBUG_SW - @p4c_dev_lib.MLB	4B8 5A7
DEV_NIMBUS_A_SDI	DEV_NIMBUS_A_SDI - @p4c_dev_lib.MLB	16A4 16C5
DEV_NIMBUS_A_SDO	DEV_NIMBUS_A_SDO - @p4c_dev_lib.MLB	16A4 16C5
DFU_STATUS	DFU_STATUS - @p4c_dev_lib.MLB	2C2 15A4 26B6
DOCK_3_3V	DOCK_3_3V - @p4c_dev_lib.MLB	14C3 14C5
DOCK_C	DOCK_C - @p4c_dev_lib.MLB	14A2 14B3
DOCK_COMP	DOCK_COMP - @p4c_dev_lib.MLB	14A3 14B3
DOCK_FW_PWR	DOCK_FW_PWR - @p4c_dev_lib.MLB	11A8 14C3
DOCK_FW_TPAP	DOCK_FW_TPAP - @p4c_dev_lib.MLB	14C2
DOCK_TCK	DOCK_TCK - @p4c_dev_lib.MLB	14C3 20C6 25D6
DOCK_TCK_MUX	DOCK_TCK_MUX - @p4c_dev_lib.MLB	20D5
DOCK_TDI	DOCK_TDI - @p4c_dev_lib.MLB	14C3 20C6 25D6
DOCK_TDI_MUX	DOCK_TDI_MUX - @p4c_dev_lib.MLB	20D5
DOCK_TDO	DOCK_TDO - @p4c_dev_lib.MLB	2B7 14C3 25D6
DOCK_TMS	DOCK_TMS - @p4c_dev_lib.MLB	2B8 14B3 25D6
DOCK_TRST*	DOCK_TRST* - @p4c_dev_lib.MLB	2B8 25D6
DOCK_UART_CTRL	DOCK_UART_CTRL - @p4c_dev_lib.MLB	11B7 20D8
DOCK_USB_PWR	DOCK_USB_PWR - @p4c_dev_lib.MLB	14C3 14D1
DOCK_Y	DOCK_Y - @p4c_dev_lib.MLB	14A2 14B3
DQM0	DQM0 - @p4c_dev_lib.MLB	28D6 29A6
DQM1	DQM1 - @p4c_dev_lib.MLB	28D6 29A8
DQM2	DQM2 - @p4c_dev_lib.MLB	28D6 29A8
DQM3	DQM3 - @p4c_dev_lib.MLB	28D6 29A6
DTR/DSR	DTR/DSR - @p4c_dev_lib.MLB	22B7
EXTERNAL_LDO_LED	EXTERNAL_LDO_LED - @p4c_dev_lib.MLB	15B7
EXT_4V	EXT_4V - @p4c_dev_lib.MLB	24C4
EXT_5V	EXT_5V - @p4c_dev_lib.MLB	24B2
EXT_5V_FILT	EXT_5V_FILT - @p4c_dev_lib.MLB	24B2 24D3
EXT_MIC+	EXT_MIC+ - @p4c_dev_lib.MLB	10C2
EXT_MIC_1817_N	EXT_MIC_1817_N - @p4c_dev_lib.MLB	8C8 10D7
EXT_MIC_1817_P	EXT_MIC_1817_P - @p4c_dev_lib.MLB	8C8 10D7
EXT_MIC_L61+	EXT_MIC_L61+ - @p4c_dev_lib.MLB	9C2
EXT_MIC_L61_N	EXT_MIC_L61_N - @p4c_dev_lib.MLB	7A5 9C7
EXT_MIC_L61_P	EXT_MIC_L61_P - @p4c_dev_lib.MLB	7A5 7A6 9A1 9D7
EXT_MIC_L61_P_RL	EXT_MIC_L61_P_RL - @p4c_dev_lib.MLB	9D5
EXT_MIC_N_1817	EXT_MIC_N_1817 - @p4c_dev_lib.MLB	8B6
EXT_MIC_N_FL	EXT_MIC_N_FL - @p4c_dev_lib.MLB	8C7
EXT_MIC_P1	EXT_MIC_P1 - @p4c_dev_lib.MLB	10D5
EXT_MIC_P_1817	EXT_MIC_P_1817 - @p4c_dev_lib.MLB	8B6
EXT_MIC_P_FL	EXT_MIC_P_FL - @p4c_dev_lib.MLB	8C7
EXT_SDIO_VCC	EXT_SDIO_VCC - @p4c_dev_lib.MLB	20A4 26C7
F0AD<0>	F0AD<0> - @p4c_dev_lib.MLB	4B7 4B8 4C7

F0AD<7..0>	F0AD<7..0> - @p4c_dev_lib.MLB	4C6
F0AD<1>	F0AD<1> - @p4c_dev_lib.MLB	4B6 4B8 4C7
F0AD<2>	F0AD<2> - @p4c_dev_lib.MLB	4B7 4B8 4C7
F0AD<3>	F0AD<3> - @p4c_dev_lib.MLB	4B6 4B8 4C7
F0AD<4>	F0AD<4> - @p4c_dev_lib.MLB	4B7 4B7 4B8
F0AD<5>	F0AD<5> - @p4c_dev_lib.MLB	4B6 4B7 4B8
F0AD<6>	F0AD<6> - @p4c_dev_lib.MLB	4A7 4A8 4B7
F0AD<7>	F0AD<7> - @p4c_dev_lib.MLB	4A6 4A8 4B7
F0ALE	F0ALE - @p4c_dev_lib.MLB	4A6 4A8 4C6
F0CE0_N	F0CE0_N - @p4c_dev_lib.MLB	4A8 4C6
F0CE1_N	F0CE1_N - @p4c_dev_lib.MLB	4A8 4C6
F0CE2_N	F0CE2_N - @p4c_dev_lib.MLB	4A7 4C6
F0CE3_N	F0CE3_N - @p4c_dev_lib.MLB	4A7 4C6
F0CE4_N	F0CE4_N - @p4c_dev_lib.MLB	4A7 4D6
F0CE5_N	F0CE5_N - @p4c_dev_lib.MLB	4A6 4D6
F0CE6_N	F0CE6_N - @p4c_dev_lib.MLB	4A7 4D6
F0CE7_N	F0CE7_N - @p4c_dev_lib.MLB	4A6 4D6
F0CLE	F0CLE - @p4c_dev_lib.MLB	4A7 4A8 4C6
F0RDYBSY0_N	F0RDYBSY0_N - @p4c_dev_lib.MLB	4A7 4A8 4D6
F0RDYBSY1_N	F0RDYBSY1_N - @p4c_dev_lib.MLB	4A7 4A8 4D6
F0RDYBSY2_N	F0RDYBSY2_N - @p4c_dev_lib.MLB	4A7 4B7 4D6
F0RDYBSY3_N	F0RDYBSY3_N - @p4c_dev_lib.MLB	4A7 4B7 4D6
F0RE_N	F0RE_N - @p4c_dev_lib.MLB	4A6 4A7 4A8 4C6
F0WE_N	F0WE_N - @p4c_dev_lib.MLB	4A6 4A8 4C6
F0WP_N	F0WP_N - @p4c_dev_lib.MLB	4A6 4A8 4D6 4D6
FAULT_LANLDO	FAULT_LANLDO - @p4c_dev_lib.MLB	28A3
FAULT_TRITONLDO	FAULT_TRITONLDO - @p4c_dev_lib.MLB	29A5
FF_CTS	FF_CTS - @p4c_dev_lib.MLB	27C7 29C8
FF_RTS	FF_RTS - @p4c_dev_lib.MLB	27C7 29C8
FF_RXD	FF_RXD - @p4c_dev_lib.MLB	27C7 29C6
FF_TXD	FF_TXD - @p4c_dev_lib.MLB	27C7 29C6
FILT+	FILT+ - @p4c_dev_lib.MLB	7B4
FLASH_CLK	FLASH_CLK - @p4c_dev_lib.MLB	4A4 4C1
	SPI0_SCLK - @p4c_dev_lib.MLB	2C3 4C2 4D1
FLASH_CS_N	FLASH_CS_N - @p4c_dev_lib.MLB	4B1 4C1
	SPI0_CS_N - @p4c_dev_lib.MLB	2C3 4C2 4D1
FLASH_DIN	FLASH_DIN - @p4c_dev_lib.MLB	4A4 4C1
	SPI0_MOSI - @p4c_dev_lib.MLB	2B3 4C2 4D1
FLASH_DOUT	FLASH_DOUT - @p4c_dev_lib.MLB	4A2 4C1
	SPI0_MISO - @p4c_dev_lib.MLB	2B3 4C2 4D1
FLASH_HOLD*	FLASH_HOLD* - @p4c_dev_lib.MLB	4A4
FLASH_WP*	FLASH_WP* - @p4c_dev_lib.MLB	4B4
FORCE_DFU	FORCE_DFU - @p4c_dev_lib.MLB	2C2 24C7 24D7 26B6
FSOURCE	FSOURCE - @p4c_dev_lib.MLB	2B6
FTL232_GPIO0	FTL232_GPIO0 - @p4c_dev_lib.MLB	22A5 22A7
	USB_TO_UART -	35C5
	@p4c_dev_lib.USBBRIDGE(i34_page22)	
FTL232_GPIO1	FTL232_GPIO1 - @p4c_dev_lib.MLB	22A7 22A7
	UART_TO_USB -	35C5
	@p4c_dev_lib.USBBRIDGE(i34_page22)	
FTL232_GPIO2	FTL232_GPIO2 - @p4c_dev_lib.MLB	22A5 22A7
	RTS_N -	35C6
	@p4c_dev_lib.USBBRIDGE(i34_page22)	
FTL232_GPIO3	FTL232_GPIO3 - @p4c_dev_lib.MLB	22A7 22A7
	CTS_N -	35C6
	@p4c_dev_lib.USBBRIDGE(i34_page22)	
FTL232_GPIO4	FTL232_GPIO4 - @p4c_dev_lib.MLB	22A7
	DTR_N -	35B6
	@p4c_dev_lib.USBBRIDGE(i34_page22)	
FTL232_GPIO5	FTL232_GPIO5 - @p4c_dev_lib.MLB	22A7
	DSR_N -	35B6
	@p4c_dev_lib.USBBRIDGE(i34_page22)	
FTL232_GPIO6	FTL232_GPIO6 - @p4c_dev_lib.MLB	22A7
	DCD_N -	35B6
	@p4c_dev_lib.USBBRIDGE(i34_page22)	
FTL232_GPIO7	FTL232_GPIO7 - @p4c_dev_lib.MLB	22A7
	RI_N -	35B6
	@p4c_dev_lib.USBBRIDGE(i34_page22)	
FW_PWR_SNS	FW_PWR_SNS - @p4c_dev_lib.MLB	11A8 15D8
FW_PWR_SNS_LED	FW_PWR_SNS_LED - @p4c_dev_lib.MLB	15D8
FW_PWR_SNS_R	FW_PWR_SNS_R - @p4c_dev_lib.MLB	15D8
GND_PMU	GND_PMU - @p4c_dev_lib.MLB	11A5 26B6 26B7 26D1 26D4
		26D5 26D7 26D8
GPS_UART_CTS_N	GPS_UART_CTS_N - @p4c_dev_lib.MLB	20A5
GPS_UART_RTS_N	GPS_UART_RTS_N - @p4c_dev_lib.MLB	20A5
GPS_UART_RX	GPS_UART_RX - @p4c_dev_lib.MLB	20A5 20C4
GPS_UART_TX	GPS_UART_TX - @p4c_dev_lib.MLB	20A5 20C4
GRAPE_BOOST_EN	GRAPE_BOOST_EN - @p4c_dev_lib.MLB	15C7 17A8 17B4 17C5
GRAPE_BOOST_EN_LED	GRAPE_BOOST_EN_LED -	15C6
	@p4c_dev_lib.MLB	
GRAPE_BOOST_EN_R	GRAPE_BOOST_EN_R - @p4c_dev_lib.MLB	15C6
GRAPE_BOOST_LDO	GRAPE_BOOST_LDO - @p4c_dev_lib.MLB	11A3 11B1 17A8
GRAPE_BOOST_LDO_N	GRAPE_BOOST_LDO_N -	17B7 26D4
	@p4c_dev_lib.MLB	
GRAPE_BOOST_LDO_P	GRAPE_BOOST_LDO_P -	17B7 26D5
	@p4c_dev_lib.MLB	
GRAPE_BOOST_SUPPLY	GRAPE_BOOST_SUPPLY -	17A8
	@p4c_dev_lib.MLB	
GRAPE_RESET_N	GRAPE_RESET_N - @p4c_dev_lib.MLB	3B5 12D8
GRAPE_RESET_Z2*	GRAPE_RESET_Z2* - @p4c_dev_lib.MLB	12D8 17B2 17B5
GRAPE_VDD_1V8_LED	GRAPE_VDD_1V8_LED -	15C7
	@p4c_dev_lib.MLB	
GRAPE_VDD_1V8_R	GRAPE_VDD_1V8_R - @p4c_dev_lib.MLB	15C7
GSM_TXBURST_IND_N	GSM_TXBURST_IND_N -	15C3 20B6
	@p4c_dev_lib.MLB	
HOLD_KEY	HOLD_KEY - @p4c_dev_lib.MLB	3C5 12A3
HP_AUD_L	HP_AUD_L - @p4c_dev_lib.MLB	10C6
HP_AUD_L_1817	HP_AUD_L_1817 - @p4c_dev_lib.MLB	8D1 10C8
HP_AUD_L_CONN	HP_AUD_L_CONN - @p4c_dev_lib.MLB	10C4
HP_AUD_L_FILTER	HP_AUD_L_FILTER - @p4c_dev_lib.MLB	10C7
HP_AUD_L_L61	HP_AUD_L_L61 - @p4c_dev_lib.MLB	7C1 7C1 9C8
HP_AUD_L_L61_CONN	HP_AUD_L_L61_CONN -	9C4
	@p4c_dev_lib.MLB	
HP_AUD_L_L61_RL	HP_AUD_L_L61_RL - @p4c_dev_lib.MLB	9C6
HP_AUD_R	HP_AUD_R - @p4c_dev_lib.MLB	10C6
HP_AUD_R_1817	HP_AUD_R_1817 - @p4c_dev_lib.MLB	8D1 10C8
HP_AUD_R_CONN	HP_AUD_R_CONN - @p4c_dev_lib.MLB	10C4
HP_AUD_R_FILTER	HP_AUD_R_FILTER - @p4c_dev_lib.MLB	10C7
HP_AUD_R_L61	HP_AUD_R_L61 - @p4c_dev_lib.MLB	7C2 7C2 9C8
HP_AUD_R_L61_CONN	HP_AUD_R_L61_CONN -	9C4
	@p4c_dev_lib.MLB	
HP_AUD_R_L61_RL	HP_AUD_R_L61_RL - @p4c_dev_lib.MLB	9C6
HP_COM_1817	HP_COM_1817 - @p4c_dev_lib.MLB	8B6
HP_DETECT_1817	HP_DETECT_1817 - @p4c_dev_lib.MLB	8B6 10B5 12A6 12B8
HP_DETECT_FL	HP_DETECT_FL - @p4c_dev_lib.MLB	10B3
HP_DETECT_FL_L61	HP_DETECT_FL_L61 - @p4c_dev_lib.MLB	9B3
HP_DETECT_INV_1817	HP_DETECT_INV_1817 -	10B3
	@p4c_dev_lib.MLB	
HP_DETECT_L61	HP_DETECT_L61 - @p4c_dev_lib.MLB	7C3 9C3 12A6 12B8
HP_DETECT_L61_SW	HP_DETECT_L61_SW - @p4c_dev_lib.MLB	9C3
HP_DETECT_PMU	HP_DETECT_PMU - @p4c_dev_lib.MLB	11B7 12B8
HP_DETECT_SW	HP_DETECT_SW - @p4c_dev_lib.MLB	10C3
HP_LG_3K	HP_LG_3K - @p4c_dev_lib.MLB	9A5
HP_LG_10K	HP_LG_10K - @p4c_dev_lib.MLB	9A5

HP_LG_15	HP_LG_15 - @p4c_dev_lib.MLB	9A5
HP_LG_30	HP_LG_30 - @p4c_dev_lib.MLB	9A5
HP_L_3K	HP_L_3K - @p4c_dev_lib.MLB	9A5
HP_L_10K	HP_L_10K - @p4c_dev_lib.MLB	9A5
HP_L_15	HP_L_15 - @p4c_dev_lib.MLB	9A5
HP_L_30	HP_L_30 - @p4c_dev_lib.MLB	9A5
HP_L_LOAD_SNS	HP_L_LOAD_SNS - @p4c_dev_lib.MLB	9A5
HP_L_LOAD_SNS_RL	HP_L_LOAD_SNS_RL - @p4c_dev_lib.MLB	9A7
HP_L_SNUB	HP_L_SNUB - @p4c_dev_lib.MLB	9B7
HP_REF_L61	HP_REF_L61 - @p4c_dev_lib.MLB	7C3 9C1
HP_RET	HP_RET - @p4c_dev_lib.MLB	10D5
HP_RET_1817	HP_RET_1817 - @p4c_dev_lib.MLB	8B6 10C3
HP_RET_L61	HP_RET_L61 - @p4c_dev_lib.MLB	9C5
HP_RG_3K	HP_RG_3K - @p4c_dev_lib.MLB	9A5
HP_RG_10K	HP_RG_10K - @p4c_dev_lib.MLB	9A5
HP_RG_15	HP_RG_15 - @p4c_dev_lib.MLB	9B5
HP_RG_30	HP_RG_30 - @p4c_dev_lib.MLB	9A5
HP_R_3K	HP_R_3K - @p4c_dev_lib.MLB	9B5
HP_R_10K	HP_R_10K - @p4c_dev_lib.MLB	9B5
HP_R_15	HP_R_15 - @p4c_dev_lib.MLB	9B5
HP_R_30	HP_R_30 - @p4c_dev_lib.MLB	9B5
HP_R_LOAD_SNS	HP_R_LOAD_SNS - @p4c_dev_lib.MLB	9B5
HP_R_LOAD_SNS_RL	HP_R_LOAD_SNS_RL - @p4c_dev_lib.MLB	9B7
HP_R_SNUB	HP_R_SNUB - @p4c_dev_lib.MLB	9B8
I2C0_SCL_1V8	I2C0_SCL_1V8 - @p4c_dev_lib.MLB	5C8 11B7 12A8 13B5 21A6
I2C0_SCL_1V8_1817	I2C0_SCL_1V8_1817 - @p4c_dev_lib.MLB	8B6 12A8
I2C0_SCL_1V8_L61	I2C0_SCL_1V8_L61 - @p4c_dev_lib.MLB	7C6 9A4 12A8
I2C0_SCL_3V	I2C0_SCL_3V - @p4c_dev_lib.MLB	21A4 21B7
I2C0_SDA_1V8	I2C0_SDA_1V8 - @p4c_dev_lib.MLB	5C8 11B7 12A8 13B5 21A6
I2C0_SDA_1V8_1817	I2C0_SDA_1V8_1817 - @p4c_dev_lib.MLB	8B4 12A8
I2C0_SDA_1V8_L61	I2C0_SDA_1V8_L61 - @p4c_dev_lib.MLB	7C6 9A4 12A8
I2C0_SDA_3V	I2C0_SDA_3V - @p4c_dev_lib.MLB	21A4 21B7
I2C1_SCL_3V0	I2C1_SCL_3V0 - @p4c_dev_lib.MLB	2B1 21B7 23D8
	I2C_SCL_3V_ONBOARD - @p4c_dev_lib.MLB	23A8 23B2 23D7
I2C1_SDA_3V0	I2C1_SDA_3V0 - @p4c_dev_lib.MLB	2B1 21B7 23C8
	I2C_SDA_3V_ONBOARD - @p4c_dev_lib.MLB	23A8 23B2 23C7
I2S0_MCK_AP	I2S0_MCK_AP - @p4c_dev_lib.MLB	5C8
I2S1_BCLK	I2S1_BCLK - @p4c_dev_lib.MLB	3C5 12A7 12A8
I2S1_DIN	I2S1_DIN - @p4c_dev_lib.MLB	3C5 12A7 12A8
I2S1_DOUT	I2S1_DOUT - @p4c_dev_lib.MLB	3C5 12A7 12A8
I2S1_LRCLK	I2S1_LRCLK - @p4c_dev_lib.MLB	3C5 12A7 12A8
I2S1_MCK	I2S1_MCK - @p4c_dev_lib.MLB	3C5 12A8 26B6
I2S2_MCK	I2S2_MCK - @p4c_dev_lib.MLB	3C5
I2S_DIR	I2S_DIR - @p4c_dev_lib.MLB	29C3 29C8
I2S_DIR_TRITON	I2S_DIR_TRITON - @p4c_dev_lib.MLB	29C2
I2S_MON_BB_RX_3V3	I2S_MON_BB_RX_3V3 - @p4c_dev_lib.MLB	28B7 28C8 29C6
I2S_MON_BB_RX_3V3_N	I2S_MON_BB_RX_3V3_N - @p4c_dev_lib.MLB	28A7 28C6
I2S_SDATA_IN_3V3	I2S_SDATA_IN_3V3 - @p4c_dev_lib.MLB	28B8 29C8
I2S_SYSCLK	I2S_SYSCLK - @p4c_dev_lib.MLB	29C8
I24_COM_C	I24_COM_C - @p4c_dev_lib.MLB	28C2
ID0_PU	ID0_PU - @p4c_dev_lib.MLB	5A6
ID1_PU	ID1_PU - @p4c_dev_lib.MLB	5A6
ID2_PU	ID2_PU - @p4c_dev_lib.MLB	5A6
ID3_PU	ID3_PU - @p4c_dev_lib.MLB	5A6
INTMICN	INTMICN - @p4c_dev_lib.MLB	7A4
INTMICP	INTMICP - @p4c_dev_lib.MLB	7A4
INT_GPIO52	INT_GPIO52 - @p4c_dev_lib.MLB	28A6 29B6
INT_MIC_1817_N	INT_MIC_1817_N - @p4c_dev_lib.MLB	8C8 8D8 12B7
INT_MIC_1817_P	INT_MIC_1817_P - @p4c_dev_lib.MLB	8C8 8D8 12B7
INT_MIC_L61_N	INT_MIC_L61_N - @p4c_dev_lib.MLB	7A3 12B7
INT_MIC_L61_P	INT_MIC_L61_P - @p4c_dev_lib.MLB	7A3 12B7
INT_MIC_N	INT_MIC_N - @p4c_dev_lib.MLB	8A2 12B7
INT_MIC_N_1817	INT_MIC_N_1817 - @p4c_dev_lib.MLB	8C6
INT_MIC_N_FL	INT_MIC_N_FL - @p4c_dev_lib.MLB	8C7
INT_MIC_P	INT_MIC_P - @p4c_dev_lib.MLB	8A4 12B7
INT_MIC_P_1817	INT_MIC_P_1817 - @p4c_dev_lib.MLB	8C6
INT_MIC_P_FL	INT_MIC_P_FL - @p4c_dev_lib.MLB	8C7
IO_SEL_A	IO_SEL_A - @p4c_dev_lib.MLB	22B4
	VDDIO_FB - @p4c_dev_lib.USBBRIDGE(i26_page22)	33C4
	FB_1.8V - @p4c_dev_lib.USBBRIDGE(i26_page22)	33D5
IO_SEL_B	IO_SEL_B - @p4c_dev_lib.MLB	22D2
	VDDIO_FB - @p4c_dev_lib.USBBRIDGE(i3_page22)	34C4
	FB_1.8V - @p4c_dev_lib.USBBRIDGE(i3_page22)	34D5
IO_SEL_C	IO_SEL_C - @p4c_dev_lib.MLB	22D4
	VDDIO_FB - @p4c_dev_lib.USBBRIDGE(i1_page22)	32C4
	FB_1.8V - @p4c_dev_lib.USBBRIDGE(i1_page22)	32D5
IO_SEL_E	IO_SEL_E - @p4c_dev_lib.MLB	22A6
	VDDIO_FB - @p4c_dev_lib.USBBRIDGE(i34_page22)	35C4
	FB_1.8V - @p4c_dev_lib.USBBRIDGE(i34_page22)	35D5
IPC_DIR	IPC_DIR - @p4c_dev_lib.MLB	29C8 29D4
IPC_MISO	IPC_MISO - @p4c_dev_lib.MLB	4C1 20B6 29C3
	SPI2_MISO - @p4c_dev_lib.MLB	4C2 4D2
IPC_MISO_3V3	IPC_MISO_3V3 - @p4c_dev_lib.MLB	29C5 29C8
IPC_MOSI	IPC_MOSI - @p4c_dev_lib.MLB	4C1 20A6 29D3
	SPI2_MOSI - @p4c_dev_lib.MLB	4C2 4D2
IPC_MOSI_3V3	IPC_MOSI_3V3 - @p4c_dev_lib.MLB	29C8 29C8 29D5
IPC_MRDY	IPC_MRDY - @p4c_dev_lib.MLB	3C5 20A6 29D3
IPC_MRDY_3V3	IPC_MRDY_3V3 - @p4c_dev_lib.MLB	29B8 29D5
IPC_SCLK	IPC_SCLK - @p4c_dev_lib.MLB	4C1 20B6 29B3
	SPI2_SCLK - @p4c_dev_lib.MLB	4C2 4D2
IPC_SCLK_3V3	IPC_SCLK_3V3 - @p4c_dev_lib.MLB	29B5 29C8 29D8
IPC_SCLK_DIR	IPC_SCLK_DIR - @p4c_dev_lib.MLB	29B5 29B6
LO_L_30	LO_L_30 - @p4c_dev_lib.MLB	14D6
IPC_SRDY	IPC_SRDY - @p4c_dev_lib.MLB	4C1 20A6 29C3
	SPI2_CS_N - @p4c_dev_lib.MLB	4C2 4D2
IPC_SRDY_3V3	IPC_SRDY_3V3 - @p4c_dev_lib.MLB	29B6 29C5
IRDR_PROX	IRDR_PROX - @p4c_dev_lib.MLB	23B3
IREF	IREF - @p4c_dev_lib.MLB	11C7
IRQ_1817	IRQ_1817 - @p4c_dev_lib.MLB	8A7 8B6 12B8
IRQ_L61_N	IRQ_L61_N - @p4c_dev_lib.MLB	7C6 12A8 12B8
IRQ_PMU_1817*	IRQ_PMU_1817* - @p4c_dev_lib.MLB	8B6 12A8
IR_DRV	IR_DRV - @p4c_dev_lib.MLB	16A4 16C5
IR_IN	IR_IN - @p4c_dev_lib.MLB	16D7
ISL29003_REXT	ISL29003_REXT - @p4c_dev_lib.MLB	23A6
I_DIODE	I_DIODE - @p4c_dev_lib.MLB	23D4
J8_105	J8_105 - @p4c_dev_lib.MLB	29B8
J18_1	J18_1 - @p4c_dev_lib.MLB	29D7
J18_2	J18_2 - @p4c_dev_lib.MLB	29D6
J18_5	J18_5 - @p4c_dev_lib.MLB	29D7
J18_7	J18_7 - @p4c_dev_lib.MLB	29D7
J18_15	J18_15 - @p4c_dev_lib.MLB	29D7

J18_16	J18_16 - @p4c_dev_lib.MLB	29D6
J18_17	J18_17 - @p4c_dev_lib.MLB	29D7
J18_18	J18_18 - @p4c_dev_lib.MLB	29D6
J18_19	J18_19 - @p4c_dev_lib.MLB	29D7
J18_20	J18_20 - @p4c_dev_lib.MLB	29D6
J18_21	J18_21 - @p4c_dev_lib.MLB	29D7
J18_22	J18_22 - @p4c_dev_lib.MLB	29D6
J18_23	J18_23 - @p4c_dev_lib.MLB	29D7
J18_24	J18_24 - @p4c_dev_lib.MLB	29D6
J18_25	J18_25 - @p4c_dev_lib.MLB	29D7
J18_26	J18_26 - @p4c_dev_lib.MLB	29D6
J18_27	J18_27 - @p4c_dev_lib.MLB	29D7
J18_29	J18_29 - @p4c_dev_lib.MLB	29D8
J18_30	J18_30 - @p4c_dev_lib.MLB	29D6
J18_31	J18_31 - @p4c_dev_lib.MLB	29D8
J18_32	J18_32 - @p4c_dev_lib.MLB	29D6
J18_33	J18_33 - @p4c_dev_lib.MLB	29D8
J18_34	J18_34 - @p4c_dev_lib.MLB	29D6
J18_35	J18_35 - @p4c_dev_lib.MLB	29D8
J18_36	J18_36 - @p4c_dev_lib.MLB	29D6
J18_37	J18_37 - @p4c_dev_lib.MLB	29D8
J18_38	J18_38 - @p4c_dev_lib.MLB	29D6
J18_39	J18_39 - @p4c_dev_lib.MLB	29B8
J18_43	J18_43 - @p4c_dev_lib.MLB	29D8
J18_44	J18_44 - @p4c_dev_lib.MLB	29D6
J18_46	J18_46 - @p4c_dev_lib.MLB	29C6
J18_47	J18_47 - @p4c_dev_lib.MLB	29C8
J18_48	J18_48 - @p4c_dev_lib.MLB	29C6
J18_49	J18_49 - @p4c_dev_lib.MLB	29C8
J18_52	J18_52 - @p4c_dev_lib.MLB	29C6
J18_54	J18_54 - @p4c_dev_lib.MLB	29C6
J18_58	J18_58 - @p4c_dev_lib.MLB	29C6
J18_59	J18_59 - @p4c_dev_lib.MLB	29C8
J18_60	J18_60 - @p4c_dev_lib.MLB	29C6
J18_63	J18_63 - @p4c_dev_lib.MLB	29C8
J18_64	J18_64 - @p4c_dev_lib.MLB	29C6
J18_65	J18_65 - @p4c_dev_lib.MLB	29C8
J18_70	J18_70 - @p4c_dev_lib.MLB	29C6
J18_82	J18_82 - @p4c_dev_lib.MLB	29C6
J18_88	J18_88 - @p4c_dev_lib.MLB	29C6
J18_91	J18_91 - @p4c_dev_lib.MLB	29C8
J18_93	J18_93 - @p4c_dev_lib.MLB	29C8
J18_95	J18_95 - @p4c_dev_lib.MLB	29C8
J18_97	J18_97 - @p4c_dev_lib.MLB	29B8
J18_100	J18_100 - @p4c_dev_lib.MLB	29B6
J18_103	J18_103 - @p4c_dev_lib.MLB	29B8
J18_104	J18_104 - @p4c_dev_lib.MLB	29B6
J18_107	J18_107 - @p4c_dev_lib.MLB	29B8
J18_108	J18_108 - @p4c_dev_lib.MLB	29B6
J18_109	J18_109 - @p4c_dev_lib.MLB	29B8
J18_111	J18_111 - @p4c_dev_lib.MLB	29B8
J18_113	J18_113 - @p4c_dev_lib.MLB	29B8
J18_116	J18_116 - @p4c_dev_lib.MLB	29B6
J18_117	J18_117 - @p4c_dev_lib.MLB	29B8
J18_118	J18_118 - @p4c_dev_lib.MLB	29B6
J18_122	J18_122 - @p4c_dev_lib.MLB	29B6
J18_123	J18_123 - @p4c_dev_lib.MLB	29B8
J18_124	J18_124 - @p4c_dev_lib.MLB	29B6
J18_125	J18_125 - @p4c_dev_lib.MLB	29B8
J18_126	J18_126 - @p4c_dev_lib.MLB	29B6
J18_128	J18_128 - @p4c_dev_lib.MLB	29B6
J18_130	J18_130 - @p4c_dev_lib.MLB	29B6
J18_132	J18_132 - @p4c_dev_lib.MLB	29B6
J18_134	J18_134 - @p4c_dev_lib.MLB	29B6
J18_137	J18_137 - @p4c_dev_lib.MLB	29B8
J18_138	J18_138 - @p4c_dev_lib.MLB	29B6
J18_140	J18_140 - @p4c_dev_lib.MLB	29B6
J18_141	J18_141 - @p4c_dev_lib.MLB	29B8
J18_142	J18_142 - @p4c_dev_lib.MLB	29B6
J18_144	J18_144 - @p4c_dev_lib.MLB	29B6
J18_146	J18_146 - @p4c_dev_lib.MLB	29B6
J18_147	J18_147 - @p4c_dev_lib.MLB	29B8
J18_149	J18_149 - @p4c_dev_lib.MLB	29A8
J18_150	J18_150 - @p4c_dev_lib.MLB	29A6
J18_151	J18_151 - @p4c_dev_lib.MLB	29A8
J18_152	J18_152 - @p4c_dev_lib.MLB	29A6
J18_154	J18_154 - @p4c_dev_lib.MLB	29A6
J18_155	J18_155 - @p4c_dev_lib.MLB	29A8
J18_158	J18_158 - @p4c_dev_lib.MLB	29A6
J18_159	J18_159 - @p4c_dev_lib.MLB	29A8
J24_PIN4	J24_PIN4 - @p4c_dev_lib.MLB	28C2
J24_PIN5	J24_PIN5 - @p4c_dev_lib.MLB	28C2
J24_PIN7	J24_PIN7 - @p4c_dev_lib.MLB	28C2
J24_PIN8	J24_PIN8 - @p4c_dev_lib.MLB	28C1
J24_PIN45_COM	J24_PIN45_COM - @p4c_dev_lib.MLB	28C2
J24_PIN78_COM	J24_PIN78_COM - @p4c_dev_lib.MLB	28C2
J88_92	J88_92 - @p4c_dev_lib.MLB	29C6
KEEPACT	KEEPACT - @p4c_dev_lib.MLB	11C7
L61_I2S_MCLK	L61_I2S_MCLK - @p4c_dev_lib.MLB	7C7 7C8 7C8 12A8
L61_LINE_IN_L	L61_LINE_IN_L - @p4c_dev_lib.MLB	7A6 7C4
L61_LINE_IN_L_F	L61_LINE_IN_L_F - @p4c_dev_lib.MLB	7A7
L61_LINE_IN_R	L61_LINE_IN_R - @p4c_dev_lib.MLB	7A6 7B4
L61_LINE_IN_R_F	L61_LINE_IN_R_F - @p4c_dev_lib.MLB	7A7
L61_RCVR_CONN_N	L61_RCVR_CONN_N - @p4c_dev_lib.MLB	7C4 12B7
L61_RCVR_CONN_P	L61_RCVR_CONN_P - @p4c_dev_lib.MLB	7C4 12B7
L61_SDRAM+1.8V_N	L61_SDRAM+1.8V_N - @p4c_dev_lib.MLB	7C1 26C4
L61_SDRAM+1.8V_P	L61_SDRAM+1.8V_P - @p4c_dev_lib.MLB	7D1 26C5
L61_SPKR_CONN_N	L61_SPKR_CONN_N - @p4c_dev_lib.MLB	7B8 7C4
L61_SPKR_CONN_P	L61_SPKR_CONN_P - @p4c_dev_lib.MLB	7B8 7C4
L61_SPKR_LD	L61_SPKR_LD - @p4c_dev_lib.MLB	7B6
LAN_LED_GA	LAN_LED_GA - @p4c_dev_lib.MLB	28C4
LAN_LED_GK	LAN_LED_GK - @p4c_dev_lib.MLB	28C4
LAN_LED_YA	LAN_LED_YA - @p4c_dev_lib.MLB	28C4
LAN_LED_YK	LAN_LED_YK - @p4c_dev_lib.MLB	28C4
LAN_RESET_GPIO10	LAN_RESET_GPIO10 - @p4c_dev_lib.MLB	28A4 28B6 29D6
LAN_RESET_SW	LAN_RESET_SW - @p4c_dev_lib.MLB	28A5
LAN_RX_COM	LAN_RX_COM - @p4c_dev_lib.MLB	28D3
LAN_TPI1_N	LAN_TPI1_N - @p4c_dev_lib.MLB	28D4
LAN_TPI1_P	LAN_TPI1_P - @p4c_dev_lib.MLB	28D4
LAN_TPI2_N	LAN_TPI2_N - @p4c_dev_lib.MLB	28D3
LAN_TPI2_P	LAN_TPI2_P - @p4c_dev_lib.MLB	28D3
LAN_TPI_COM	LAN_TPI_COM - @p4c_dev_lib.MLB	28D4
LAN_TPI_N_B	LAN_TPI_N_B - @p4c_dev_lib.MLB	28D2
LAN_TPI_P_B	LAN_TPI_P_B - @p4c_dev_lib.MLB	28D2
LAN_TPO_N	LAN_TPO_N - @p4c_dev_lib.MLB	28D4
LAN_TPO_N_B	LAN_TPO_N_B - @p4c_dev_lib.MLB	28D2
LAN_TPO_P	LAN_TPO_P - @p4c_dev_lib.MLB	28D4
LAN_TPO_P_B	LAN_TPO_P_B - @p4c_dev_lib.MLB	28D2
LAN_TXRX_COM	LAN_TXRX_COM - @p4c_dev_lib.MLB	28C2
LAN_TX_COM	LAN_TX_COM - @p4c_dev_lib.MLB	28D3
LCD_BL_CA	LCD_BL_CA - @p4c_dev_lib.MLB	11A4 11A5 16A7 17C2
LCD_BL_CA_FB	LCD_BL_CA_FB - @p4c_dev_lib.MLB	11A4
LCD_BL_CC	LCD_BL_CC - @p4c_dev_lib.MLB	11B5 16A7 17C2
LCD_BOOST_CTRL	LCD_BOOST_CTRL - @p4c_dev_lib.MLB	13B4 16A7 17D2 26B6

LCD_BOOST_OUTPUT_CTRL	LCD_BOOST_OUTPUT_CTRL - @p4c_dev_lib.MLB	13B2
LCD_BOOST_SEL	LCD_BOOST_SEL - @p4c_dev_lib.MLB	16A6
LCD_BOOST_SRC_N	LCD_BOOST_SRC_N - @p4c_dev_lib.MLB	13C2 26C4
LCD_BOOST_SRC_P	LCD_BOOST_SRC_P - @p4c_dev_lib.MLB	13C2 26C5
LCD_BOOST_VOUT	LCD_BOOST_VOUT - @p4c_dev_lib.MLB	13C1 16A7 17C2 26C3
LCD_BOOST_VOUT_R	LCD_BOOST_VOUT_R - @p4c_dev_lib.MLB	13B1
LCD_BST_FB	LCD_BST_FB - @p4c_dev_lib.MLB	13B2
LCD_BST_SW	LCD_BST_SW - @p4c_dev_lib.MLB	13B2
LCD_BST_VIN	LCD_BST_VIN - @p4c_dev_lib.MLB	13B3
LCD_BST_VOUT_D	LCD_BST_VOUT_D - @p4c_dev_lib.MLB	13B2
LCD_CHECKSUM	LCD_CHECKSUM - @p4c_dev_lib.MLB	16A5 17D2
LCD_CHECKSUM_R	LCD_CHECKSUM_R - @p4c_dev_lib.MLB	16A6
LCD_DE	LCD_DE - @p4c_dev_lib.MLB	5A7 5B6
LCD_EXTCLK	LCD_EXTCLK - @p4c_dev_lib.MLB	5A7 5B6
LCD_HS	LCD_HS - @p4c_dev_lib.MLB	5A7 5B6
LCD_RST_C	LCD_RST_C - @p4c_dev_lib.MLB	16B6
LCD_RST_N	LCD_RST_N - @p4c_dev_lib.MLB	5A7 5B5 16B5 17C2
LCD_SYNC	LCD_SYNC - @p4c_dev_lib.MLB	12D7 16A7 17D2 26B6
	NIMBUS_LCD_SYNC - @p4c_dev_lib.MLB	12D6 16A4 16A4 16C5
LCD_VCLK	LCD_VCLK - @p4c_dev_lib.MLB	5A7 5B6
LCD_VS	LCD_VS - @p4c_dev_lib.MLB	5A7 5B6
LCM2_MIPI_CLK_N	LCM2_MIPI_CLK_N - @p4c_dev_lib.MLB	3A5 3A8 17C2
LCM2_MIPI_CLK_P	LCM2_MIPI_CLK_P - @p4c_dev_lib.MLB	3A8 3B5 17C2
LCM2_MIPI_DATA0_N	LCM2_MIPI_DATA0_N - @p4c_dev_lib.MLB	3A4 3A8 17C2
LCM2_MIPI_DATA0_P	LCM2_MIPI_DATA0_P - @p4c_dev_lib.MLB	3A5 3A8 17C2
LCM2_MIPI_DATA1_N	LCM2_MIPI_DATA1_N - @p4c_dev_lib.MLB	3A4 3A8 17C2
LCM2_MIPI_DATA1_P	LCM2_MIPI_DATA1_P - @p4c_dev_lib.MLB	3A4 3A8 17C2
LCM2_MIPI_DATA2_N	LCM2_MIPI_DATA2_N - @p4c_dev_lib.MLB	3A8 17C2
LCM2_MIPI_DATA2_P	LCM2_MIPI_DATA2_P - @p4c_dev_lib.MLB	3A8 17C2
LCM_MIPI_CLK_N	LCM_MIPI_CLK_N - @p4c_dev_lib.MLB	3A6 3A8 3C7 16A5
LCM_MIPI_CLK_P	LCM_MIPI_CLK_P - @p4c_dev_lib.MLB	3A8 3B6 3C7 16A5
LCM_MIPI_DATA0_N	LCM_MIPI_DATA0_N - @p4c_dev_lib.MLB	3A6 3B8 3C7 16A5
LCM_MIPI_DATA0_P	LCM_MIPI_DATA0_P - @p4c_dev_lib.MLB	3A6 3B8 3C7 16A5
LCM_MIPI_DATA1_N	LCM_MIPI_DATA1_N - @p4c_dev_lib.MLB	3A6 3B8 3C7 16A6
LCM_MIPI_DATA1_P	LCM_MIPI_DATA1_P - @p4c_dev_lib.MLB	3A6 3B8 3C7 16A6
LDO_4V_EN	LDO_4V_EN - @p4c_dev_lib.MLB	24C3 24C6 24D7 25B7
LDO_DB	LDO_DB - @p4c_dev_lib.MLB	22D7
LDO_SHDN*	LDO_SHDN* - @p4c_dev_lib.MLB	22D8
LEDIN	LEDIN - @p4c_dev_lib.MLB	11A3
LED_ANODE	LED_ANODE - @p4c_dev_lib.MLB	23C5
LED_CATHODE	LED_CATHODE - @p4c_dev_lib.MLB	23C5
LED_DFU	LED_DFU - @p4c_dev_lib.MLB	15B3
LED_DFU_R	LED_DFU_R - @p4c_dev_lib.MLB	15B3
LED_DS	LED_DS - @p4c_dev_lib.MLB	15B4
LED_DS10	LED_DS10 - @p4c_dev_lib.MLB	15D3
LED_DS10_R	LED_DS10_R - @p4c_dev_lib.MLB	15D3
LED_DS11	LED_DS11 - @p4c_dev_lib.MLB	15D7
LED_DS12	LED_DS12 - @p4c_dev_lib.MLB	15D2
LED_DS12_R	LED_DS12_R - @p4c_dev_lib.MLB	15D2
LED_DS13	LED_DS13 - @p4c_dev_lib.MLB	15D1
LED_DS13_R	LED_DS13_R - @p4c_dev_lib.MLB	15D1
LED_DS14	LED_DS14 - @p4c_dev_lib.MLB	15D6
LED_DS14_R	LED_DS14_R - @p4c_dev_lib.MLB	15D6
LED_DS15	LED_DS15 - @p4c_dev_lib.MLB	15D5
LED_DS15_R	LED_DS15_R - @p4c_dev_lib.MLB	15D5
LED_DS25	LED_DS25 - @p4c_dev_lib.MLB	15D4
LED_DS25_R	LED_DS25_R - @p4c_dev_lib.MLB	15D4
LED_DS_R	LED_DS_R - @p4c_dev_lib.MLB	15B4
LED_LX	LED_LX - @p4c_dev_lib.MLB	11A4 11A5
LINEIN_L_1817	LINEIN_L_1817 - @p4c_dev_lib.MLB	8C7
LINEIN_R_1817	LINEIN_R_1817 - @p4c_dev_lib.MLB	8B7
LINEOUT_L_F	LINEOUT_L_F - @p4c_dev_lib.MLB	14A8
LINEOUT_R_F	LINEOUT_R_F - @p4c_dev_lib.MLB	14B8
LINE_COM_1817	LINE_COM_1817 - @p4c_dev_lib.MLB	8B6
LINE_IN_1817_L	LINE_IN_1817_L - @p4c_dev_lib.MLB	8B8 12B7
LINE_IN_1817_R	LINE_IN_1817_R - @p4c_dev_lib.MLB	8A8 12B7
LINE_IN_L	LINE_IN_L - @p4c_dev_lib.MLB	12B7 14A7
LINE_IN_L61_L	LINE_IN_L61_L - @p4c_dev_lib.MLB	7A8 12B7
LINE_IN_L61_R	LINE_IN_L61_R - @p4c_dev_lib.MLB	7A8 12B7
LINE_IN_L_C	LINE_IN_L_C - @p4c_dev_lib.MLB	8B7
LINE_IN_R	LINE_IN_R - @p4c_dev_lib.MLB	12B7 14A7
LINE_IN_RETURN	LINE_IN_RETURN - @p4c_dev_lib.MLB	14A7
LINE_IN_R_C	LINE_IN_R_C - @p4c_dev_lib.MLB	8A7
LINE_OUT_1817_L	LINE_OUT_1817_L - @p4c_dev_lib.MLB	8D1 12A7
LINE_OUT_1817_R	LINE_OUT_1817_R - @p4c_dev_lib.MLB	8C1 12B7
LINE_OUT_L	LINE_OUT_L - @p4c_dev_lib.MLB	12A7 14A8 14D4
LINE_OUT_L61_L	LINE_OUT_L61_L - @p4c_dev_lib.MLB	7C1 12A7
LINE_OUT_L61_R	LINE_OUT_L61_R - @p4c_dev_lib.MLB	7C1 12B7
LINE_OUT_L_1817	LINE_OUT_L_1817 - @p4c_dev_lib.MLB	8C4
LINE_OUT_L_CONN	LINE_OUT_L_CONN - @p4c_dev_lib.MLB	14A5 14B2
LINE_OUT_R	LINE_OUT_R - @p4c_dev_lib.MLB	12B7 14B8 14C4
LINE_OUT_RETURN	LINE_OUT_RETURN - @p4c_dev_lib.MLB	14B6
LINE_OUT_R_1817	LINE_OUT_R_1817 - @p4c_dev_lib.MLB	8B4
LINE_OUT_R_CONN	LINE_OUT_R_CONN - @p4c_dev_lib.MLB	14B2 14B5
LINE_REF_L61	LINE_REF_L61 - @p4c_dev_lib.MLB	7C3 14B4
LINE_RET_SENSE_CONN	LINE_RET_SENSE_CONN - @p4c_dev_lib.MLB	14A2 14B3
LINE_RET_SENSE_L61	LINE_RET_SENSE_L61 - @p4c_dev_lib.MLB	7A8 7C4
LO_LG_1K	LO_LG_1K - @p4c_dev_lib.MLB	14D6
LO_LG_3K	LO_LG_3K - @p4c_dev_lib.MLB	14D6
LO_LG_10K	LO_LG_10K - @p4c_dev_lib.MLB	14D6
LO_LG_30	LO_LG_30 - @p4c_dev_lib.MLB	14D6
LO_LG_200	LO_LG_200 - @p4c_dev_lib.MLB	14D6
LO_L_1K	LO_L_1K - @p4c_dev_lib.MLB	14D6
LO_L_3K	LO_L_3K - @p4c_dev_lib.MLB	14D6
LO_L_10K	LO_L_10K - @p4c_dev_lib.MLB	14D6
LO_L_200	LO_L_200 - @p4c_dev_lib.MLB	14D6
LO_L_LOAD_SNS	LO_L_LOAD_SNS - @p4c_dev_lib.MLB	14D6
LO_L_LOAD_SNS_RL	LO_L_LOAD_SNS_RL - @p4c_dev_lib.MLB	14D8
LO_RG_1K	LO_RG_1K - @p4c_dev_lib.MLB	14C6
LO_RG_3K	LO_RG_3K - @p4c_dev_lib.MLB	14C6
LO_RG_10K	LO_RG_10K - @p4c_dev_lib.MLB	14C6
LO_RG_30	LO_RG_30 - @p4c_dev_lib.MLB	14C6
LO_RG_200	LO_RG_200 - @p4c_dev_lib.MLB	14C6
LO_R_1K	LO_R_1K - @p4c_dev_lib.MLB	14C6
LO_R_3K	LO_R_3K - @p4c_dev_lib.MLB	14C6
LO_R_10K	LO_R_10K - @p4c_dev_lib.MLB	14C6
LO_R_30	LO_R_30 - @p4c_dev_lib.MLB	14C6
LO_R_200	LO_R_200 - @p4c_dev_lib.MLB	14C6
LO_R_LOAD_SNS	LO_R_LOAD_SNS - @p4c_dev_lib.MLB	14C6
LO_R_LOAD_SNS_RL	LO_R_LOAD_SNS_RL - @p4c_dev_lib.MLB	14C8
L_LINE_IN_CONN	L_LINE_IN_CONN - @p4c_dev_lib.MLB	14A5 14B2
MA2	MA2 - @p4c_dev_lib.MLB	28D6 29B8
MA3	MA3 - @p4c_dev_lib.MLB	28D6 29B8
MAX_3232_VCC	MAX_3232_VCC - @p4c_dev_lib.MLB	22D7

MCLK1_CONN	MCLK1_CONN - @p4c_dev_lib.MLB	7C7
MCLK2_CONN	MCLK2_CONN - @p4c_dev_lib.MLB	7C7
MENU_KEY	MENU_KEY - @p4c_dev_lib.MLB	3C5 12A3
MENU_KEY*	MENU_KEY* - @p4c_dev_lib.MLB	11B8 12A5 12A5 25B7
MENU_KEY_R_N	MENU_KEY_R_N - @p4c_dev_lib.MLB	11C7
MIC1_L61	MIC1_L61 - @p4c_dev_lib.MLB	7A5 7B4
MIC1_REF_L61	MIC1_REF_L61 - @p4c_dev_lib.MLB	7A5 7B4
MIC2_L61	MIC2_L61 - @p4c_dev_lib.MLB	7A6 7B4
MIC2_REF_L61	MIC2_REF_L61 - @p4c_dev_lib.MLB	7A6 7B4
MIC2_SDET	MIC2_SDET - @p4c_dev_lib.MLB	7A5 7B4
MIC3_BIAS	MIC3_BIAS - @p4c_dev_lib.MLB	7B4 12C8
MICBIAS1_1817	MICBIAS1_1817 - @p4c_dev_lib.MLB	8B3 10D7
MICBIAS1_L61	MICBIAS1_L61 - @p4c_dev_lib.MLB	7A4 7B2 7B2
MICBIAS2_1817	MICBIAS2_1817 - @p4c_dev_lib.MLB	8B3 8D8
MICBIAS2_L61	MICBIAS2_L61 - @p4c_dev_lib.MLB	7B4 9D7
MICBIAS2_L61_R	MICBIAS2_L61_R - @p4c_dev_lib.MLB	9D6
MIC_BIAS_LDO	MIC_BIAS_LDO - @p4c_dev_lib.MLB	7D1 9B4 11B2 26D3
MIC_BIAS_LDO_CS	MIC_BIAS_LDO_CS - @p4c_dev_lib.MLB	7D3
MIC_BIAS_LDO_J	MIC_BIAS_LDO_J - @p4c_dev_lib.MLB	26D2
MIC_BIAS_LDO_N	MIC_BIAS_LDO_N - @p4c_dev_lib.MLB	7D1 26D4
MIC_BIAS_LDO_P	MIC_BIAS_LDO_P - @p4c_dev_lib.MLB	7D1 26D5
MIKEN_EN_R	MIKEN_EN_R - @p4c_dev_lib.MLB	9A3
MIKEY_AVDD_N	MIKEY_AVDD_N - @p4c_dev_lib.MLB	9B2 26D6
MIKEY_AVDD_P	MIKEY_AVDD_P - @p4c_dev_lib.MLB	9B3 26D8
MIKEY_AVDD_RR	MIKEY_AVDD_RR - @p4c_dev_lib.MLB	9B4
MIKEY_BYPASS	MIKEY_BYPASS - @p4c_dev_lib.MLB	9A2
MIKEY_DETECT	MIKEY_DETECT - @p4c_dev_lib.MLB	9A3
MIKEY_INT_N	MIKEY_INT_N - @p4c_dev_lib.MLB	9A4 11B8 12A6
MIKEY_INT_R_N	MIKEY_INT_R_N - @p4c_dev_lib.MLB	9A3
MIKEY_MICBIAS	MIKEY_MICBIAS - @p4c_dev_lib.MLB	9A2 9D7
MIKEY_SCL_R	MIKEY_SCL_R - @p4c_dev_lib.MLB	9A3
MIKEY_SDA_R	MIKEY_SDA_R - @p4c_dev_lib.MLB	9A3
MIKE_AVDD	MIKE_AVDD - @p4c_dev_lib.MLB	9B3
MUX_TXD	MUX_TXD - @p4c_dev_lib.MLB	20C4 20C4
N72_CHKSUM	N72_CHKSUM - @p4c_dev_lib.MLB	17D2
N72_EXT_AVDD	N72_EXT_AVDD - @p4c_dev_lib.MLB	17D2
N72_SPI_CS_N	N72_SPI_CS_N - @p4c_dev_lib.MLB	5D5 17D2
	RGB<23..0> - @p4c_dev_lib.MLB	5D5
NAND_SUPPLY_P_J	NAND_SUPPLY_P_J - @p4c_dev_lib.MLB	26D2
NIMBUS_1V8	NIMBUS_1V8 - @p4c_dev_lib.MLB	16C3
NIMBUS_A_SCLK	NIMBUS_A_SCLK - @p4c_dev_lib.MLB	16A4 16C5
NIMBUS_GPIO1	NIMBUS_GPIO1 - @p4c_dev_lib.MLB	16A4 16C4
NIMBUS_GPIO2	NIMBUS_GPIO2 - @p4c_dev_lib.MLB	16A4 16C5
NIMBUS_GPIO3	NIMBUS_GPIO3 - @p4c_dev_lib.MLB	16A4 16C5
NIMBUS_GRAPE_RESET_N	NIMBUS_GRAPE_RESET_N - @p4c_dev_lib.MLB	12D8 16A3 16C8 16D5
NIMBUS_HOST_INT_N	NIMBUS_HOST_INT_N - @p4c_dev_lib.MLB	12C8 16A4 16B3 16D5
NIMBUS_JTAG_17	NIMBUS_JTAG_17 - @p4c_dev_lib.MLB	16B2
NIMBUS_JTAG_19	NIMBUS_JTAG_19 - @p4c_dev_lib.MLB	16B2
NIMBUS_JTAG_RESET	NIMBUS_JTAG_RESET - @p4c_dev_lib.MLB	16C3
NIMBUS_JTAG_RTCK	NIMBUS_JTAG_RTCK - @p4c_dev_lib.MLB	16C3 16C7 16D5
NIMBUS_JTAG_TCK	NIMBUS_JTAG_TCK - @p4c_dev_lib.MLB	16C3 16C7
NIMBUS_JTAG_TDI	NIMBUS_JTAG_TDI - @p4c_dev_lib.MLB	16C3 16C7
NIMBUS_JTAG_TDO	NIMBUS_JTAG_TDO - @p4c_dev_lib.MLB	16C3 16C7
NIMBUS_JTAG_TMS	NIMBUS_JTAG_TMS - @p4c_dev_lib.MLB	16C7 25C3
NIMBUS_JTAG_TMS_CONN	NIMBUS_JTAG_TMS_CONN - @p4c_dev_lib.MLB	16C3 25C1
NIMBUS_PANEL_CONFIG	NIMBUS_PANEL_CONFIG - @p4c_dev_lib.MLB	16A4 16C3 16C5
NIMBUS_PANEL_IN<0>	NIMBUS_PANEL_IN<0> - @p4c_dev_lib.MLB	16B1 16D1 16D7
NIMBUS_PANEL_IN<1>	NIMBUS_PANEL_IN<1> - @p4c_dev_lib.MLB	16B1 16D1 16D7
NIMBUS_PANEL_IN<2>	NIMBUS_PANEL_IN<2> - @p4c_dev_lib.MLB	16B1 16D1 16D7
NIMBUS_PANEL_IN<3>	NIMBUS_PANEL_IN<3> - @p4c_dev_lib.MLB	16B1 16D1 16D7
NIMBUS_PANEL_IN<4>	NIMBUS_PANEL_IN<4> - @p4c_dev_lib.MLB	16B1 16D1 16D7
NIMBUS_PANEL_IN<5>	NIMBUS_PANEL_IN<5> - @p4c_dev_lib.MLB	16B1 16D1 16D7
NIMBUS_PANEL_IN<6>	NIMBUS_PANEL_IN<6> - @p4c_dev_lib.MLB	16B1 16D1 16D7
NIMBUS_PANEL_IN<7>	NIMBUS_PANEL_IN<7> - @p4c_dev_lib.MLB	16B1 16D1 16D7
NIMBUS_PANEL_IN<8>	NIMBUS_PANEL_IN<8> - @p4c_dev_lib.MLB	16B1 16D1 16D7
NIMBUS_PANEL_IN<9>	NIMBUS_PANEL_IN<9> - @p4c_dev_lib.MLB	16B1 16D1 16D7
NIMBUS_RST_RC	NIMBUS_RST_RC - @p4c_dev_lib.MLB	16D5 25C4
NIMBUS_RST_SEL	NIMBUS_RST_SEL - @p4c_dev_lib.MLB	25C3
NIMBUS_SPI_CLK	NIMBUS_SPI_CLK - @p4c_dev_lib.MLB	12D8 16B3 16C5
NIMBUS_SPI_CS*	NIMBUS_SPI_CS* - @p4c_dev_lib.MLB	12D8 16B4 16C4
NIMBUS_SPI_MISO	NIMBUS_SPI_MISO - @p4c_dev_lib.MLB	12D8 16B3 16C5
NIMBUS_SPI_MOSI	NIMBUS_SPI_MOSI - @p4c_dev_lib.MLB	12D8 16B4 16C3
NIMBUS_SPI_MOSI_R	NIMBUS_SPI_MOSI_R - @p4c_dev_lib.MLB	16C5
NIMBUS_TM<1>	NIMBUS_TM<1> - @p4c_dev_lib.MLB	16C7 16D5
NIMBUS_TRST_N	NIMBUS_TRST_N - @p4c_dev_lib.MLB	16C3
NIMBUS_VSTM_OUT<0>	NIMBUS_VSTM_OUT<0> - @p4c_dev_lib.MLB	16B1 16C1 16D5
NIMBUS_VSTM_OUT<1>	NIMBUS_VSTM_OUT<1> - @p4c_dev_lib.MLB	16B1 16C1 16D5
NIMBUS_VSTM_OUT<2>	NIMBUS_VSTM_OUT<2> - @p4c_dev_lib.MLB	16B1 16C1 16D5
NIMBUS_VSTM_OUT<3>	NIMBUS_VSTM_OUT<3> - @p4c_dev_lib.MLB	16B3 16C3 16D5
NIMBUS_VSTM_OUT<4>	NIMBUS_VSTM_OUT<4> - @p4c_dev_lib.MLB	16B3 16C3 16D5
NIMBUS_VSTM_OUT<5>	NIMBUS_VSTM_OUT<5> - @p4c_dev_lib.MLB	16B3 16D3 16D5
NIMBUS_VSTM_OUT<6>	NIMBUS_VSTM_OUT<6> -	16B3 16D3 16D5
NIMBUS_VSTM_OUT<7>	NIMBUS_VSTM_OUT<7> - @p4c_dev_lib.MLB	16B3 16D3 16D5
NIMBUS_VSTM_OUT<8>	NIMBUS_VSTM_OUT<8> - @p4c_dev_lib.MLB	16B3 16D3 16D5
NIMBUS_VSTM_OUT<9>	NIMBUS_VSTM_OUT<9> - @p4c_dev_lib.MLB	16B3 16D3 16D5
NIMBUS_VSTM_OUT<10>	NIMBUS_VSTM_OUT<10> - @p4c_dev_lib.MLB	16B3 16D3 16D5
NIMBUS_VSTM_OUT<11>	NIMBUS_VSTM_OUT<11> - @p4c_dev_lib.MLB	16B3 16D3 16D5
NIMBUS_VSTM_OUT<12>	NIMBUS_VSTM_OUT<12> - @p4c_dev_lib.MLB	16B3 16D3 16D5
NIMBUS_VSTM_OUT<13>	NIMBUS_VSTM_OUT<13> - @p4c_dev_lib.MLB	16B3 16D3 16D5
NIMBUS_VSTM_OUT<14>	NIMBUS_VSTM_OUT<14> - @p4c_dev_lib.MLB	16B3 16D3 16D5
NTC	NTC - @p4c_dev_lib.MLB	11B7 20B7 24D2
OE_N	OE_N - @p4c_dev_lib.MLB	28A6 29A8
ON_GPIO_DIR	ON_GPIO_DIR - @p4c_dev_lib.MLB	29A5 29B8

CHINAFIX

OSC32I	OSC32I - @p4c_dev_lib.MLB	11D6
OSC32O	OSC32O - @p4c_dev_lib.MLB	11D6
P2A_01	P2A_01 - @p4c_dev_lib.MLB	22C6
P2A_02	P2A_02 - @p4c_dev_lib.MLB	22C5
PIPESTAT0	PIPESTAT0 - @p4c_dev_lib.MLB	20B5 25C7
PIPESTAT1	PIPESTAT1 - @p4c_dev_lib.MLB	20B5 25D7
PIPESTAT2	PIPESTAT2 - @p4c_dev_lib.MLB	20B4 25D7
PMU_IRQ_N	PMU_IRQ_N - @p4c_dev_lib.MLB	5D5 11C7
	RGB<23..0> - @p4c_dev_lib.MLB	5D5
POD_TO_ACC_AP	POD_TO_ACC_AP - @p4c_dev_lib.MLB	2C7 20C8
POD_TO_ACC_DOCK	POD_TO_ACC_DOCK - @p4c_dev_lib.MLB	14B6 20D6
POD_TO_ACC_DOCK_CONN	POD_TO_ACC_DOCK_CONN - @p4c_dev_lib.MLB	14B3 14D2 22B6 22C7
POD_TO_ACC_MAX3232	POD_TO_ACC_MAX3232 - @p4c_dev_lib.MLB	22B8
PP1V3_VIBE	PP1V3_VIBE - @p4c_dev_lib.MLB	11B2 13D4
PP1V8	PP1V8 - @p4c_dev_lib.MLB	2B8 2C1 2C8 2D8 3C1 3D5 3D5 3D8 5A7 5B5 5C8 5D5 5D8 7C1 7D8 7D8 11A2 11A6 11A8 11C4 12A3 12B3 12B4 12C3 12C4 13C5 15A6 16A5 16A8 17C2 17D3 20D5 21A5 21B5 21D8 24D6 24D7 25C4 25D5 29A4
PP1V8_CODEC	PP1V8_CODEC - @p4c_dev_lib.MLB	5D7
PP1V8_CODEC1	PP1V8_CODEC1 - @p4c_dev_lib.MLB	3D6
PP1V8_CODEC1_N	PP1V8_CODEC1_N - @p4c_dev_lib.MLB	3D5 26C4
PP1V8_CODEC1_P	PP1V8_CODEC1_P - @p4c_dev_lib.MLB	3D5 26C5
PP1V8_CODEC_N	PP1V8_CODEC_N - @p4c_dev_lib.MLB	5D8 26D6
PP1V8_CODEC_P	PP1V8_CODEC_P - @p4c_dev_lib.MLB	5D8 26D8
PP1V8_DDR	PP1V8_DDR - @p4c_dev_lib.MLB	3C2
PP1V8_DDR_N	PP1V8_DDR_N - @p4c_dev_lib.MLB	3C1 26C4
PP1V8_DDR_P	PP1V8_DDR_P - @p4c_dev_lib.MLB	3C1 26C5
PP1V8_GRAPE	PP1V8_GRAPE - @p4c_dev_lib.MLB	11A7 11C4 12D8 15C8
PP1V8_GRAPE_NIMBUS	PP1V8_GRAPE_NIMBUS - @p4c_dev_lib.MLB	12D8 16B4 25C4
PP1V8_GRAPE_NIMBUS_JTAG	PP1V8_GRAPE_NIMBUS_JTAG - @p4c_dev_lib.MLB	16C3
PP1V8_GRAPE_NIMBUS_N	PP1V8_GRAPE_NIMBUS_N - @p4c_dev_lib.MLB	16C4 26C6
PP1V8_GRAPE_NIMBUS_P	PP1V8_GRAPE_NIMBUS_P - @p4c_dev_lib.MLB	16C4 26C8
PP1V8_GRAPE_NIMBUS_VDD	PP1V8_GRAPE_NIMBUS_VDD - @p4c_dev_lib.MLB	16A4 16B5 16B5 16C4 16C8 16D5 16D8
PP1V8_GRAPE_Z2	PP1V8_GRAPE_Z2 - @p4c_dev_lib.MLB	12D8 17B5 17B8 17D5 21D5 21D8
PP1V8_GRAPE_Z2_CS	PP1V8_GRAPE_Z2_CS - @p4c_dev_lib.MLB	17D6
PP1V8_GRAPE_Z2_JTAG	PP1V8_GRAPE_Z2_JTAG - @p4c_dev_lib.MLB	21D5
PP1V8_GRAPE_Z2_M	PP1V8_GRAPE_Z2_M - @p4c_dev_lib.MLB	17D2 17D3
PP1V8_GRAPE_Z2_M_N	PP1V8_GRAPE_Z2_M_N - @p4c_dev_lib.MLB	17D2 26D4
PP1V8_GRAPE_Z2_M_P	PP1V8_GRAPE_Z2_M_P - @p4c_dev_lib.MLB	17D2 26D5
PP1V8_GRAPE_Z2_N	PP1V8_GRAPE_Z2_N - @p4c_dev_lib.MLB	17D5 26C1
PP1V8_GRAPE_Z2_P	PP1V8_GRAPE_Z2_P - @p4c_dev_lib.MLB	17D5 26C2
PP1V8_L61_JR	PP1V8_L61_JR - @p4c_dev_lib.MLB	7D8
PP1V8_LCD_M2	PP1V8_LCD_M2 - @p4c_dev_lib.MLB	5D6
PP1V8_LCD_M2_N	PP1V8_LCD_M2_N - @p4c_dev_lib.MLB	5D5 26D4
PP1V8_LCD_M2_P	PP1V8_LCD_M2_P - @p4c_dev_lib.MLB	5D5 26D5
PP1V8_MIPI	PP1V8_MIPI - @p4c_dev_lib.MLB	3D6
PP1V8_MIPI_N	PP1V8_MIPI_N - @p4c_dev_lib.MLB	3D5 26C6
PP1V8_MIPI_P	PP1V8_MIPI_P - @p4c_dev_lib.MLB	3D5 26C8
PP1V8_OSC	PP1V8_OSC - @p4c_dev_lib.MLB	2D6
PP1V8_OSC_N	PP1V8_OSC_N - @p4c_dev_lib.MLB	2D8 26D6
PP1V8_OSC_P	PP1V8_OSC_P - @p4c_dev_lib.MLB	2D8 26D8
PP1V8_R_L_OSC	PP1V8_R_L_OSC - @p4c_dev_lib.MLB	2D7
PP1V8_SDIO	PP1V8_SDIO - @p4c_dev_lib.MLB	3D7
PP1V8_SDIO_N	PP1V8_SDIO_N - @p4c_dev_lib.MLB	3D8 26C6
PP1V8_SDIO_P	PP1V8_SDIO_P - @p4c_dev_lib.MLB	3D8 26C8
PP1V8_SDRAM	PP1V8_SDRAM - @p4c_dev_lib.MLB	3D1 3D1 7C1 7D8 8D6 9A4 9B4 10B4 10B4 11C3 15A7 16B5 26D3
PP1V8_SDRAM_DDRVDDQ	PP1V8_SDRAM_DDRVDDQ - @p4c_dev_lib.MLB	3D3
PP1V8_SDRAM_DDRVDDQ_N	PP1V8_SDRAM_DDRVDDQ_N - @p4c_dev_lib.MLB	3D1 26C6
PP1V8_SDRAM_DDRVDDQ_P	PP1V8_SDRAM_DDRVDDQ_P - @p4c_dev_lib.MLB	3D1 26C8
PP1V8_SDRAM_VDDIOD	PP1V8_SDRAM_VDDIOD - @p4c_dev_lib.MLB	3D2
PP1V8_SDRAM_VDDIOD_N	PP1V8_SDRAM_VDDIOD_N - @p4c_dev_lib.MLB	3C1 26C4
PP1V8_SDRAM_VDDIOD_P	PP1V8_SDRAM_VDDIOD_P - @p4c_dev_lib.MLB	3C1 26C5
PP1V8_TRITON	PP1V8_TRITON - @p4c_dev_lib.MLB	29A3 29B1 29B1 29B4 29C1 29C3 29C3 29D1 29D4
PP1V8_TW	PP1V8_TW - @p4c_dev_lib.MLB	2C3
PP1V8_TW_N	PP1V8_TW_N - @p4c_dev_lib.MLB	2C1 26C4
PP1V8_TW_P	PP1V8_TW_P - @p4c_dev_lib.MLB	2C1 26C5
PP1V8_TW_R_L	PP1V8_TW_R_L - @p4c_dev_lib.MLB	2C2
PP1V8_VD	PP1V8_VD - @p4c_dev_lib.MLB	12B2
PP1V8_VD2	PP1V8_VD2 - @p4c_dev_lib.MLB	7C8
PP1V8_VSD2	PP1V8_VSD2 - @p4c_dev_lib.MLB	13D6 20B5 20D2 20D2 20D5 20D7 25D4 25D7 25D7
PP1V35	PP1V35 - @p4c_dev_lib.MLB	2A1 2A7 2C8 2D1 3D8 11C3 11C4
PP1V35_FB	PP1V35_FB - @p4c_dev_lib.MLB	2A2 11C5
PP1V35_MIPI	PP1V35_MIPI - @p4c_dev_lib.MLB	3D7
PP1V35_MIPI_N	PP1V35_MIPI_N - @p4c_dev_lib.MLB	3D8 26C6
PP1V35_MIPI_P	PP1V35_MIPI_P - @p4c_dev_lib.MLB	3D8 26C8
PP1V35_PLL	PP1V35_PLL - @p4c_dev_lib.MLB	2C6
PP1V35_PLL_N	PP1V35_PLL_N - @p4c_dev_lib.MLB	2C8 26D6
PP1V35_PLL_P	PP1V35_PLL_P - @p4c_dev_lib.MLB @p4c_dev_lib.USBBRIDGE(i3_page22)	2C8 26B8
PP1V35_R_L_PLL	PP1V35_R_L_PLL - @p4c_dev_lib.MLB	2C7
PP1V35_USB_VDD	PP1V35_USB_VDD - @p4c_dev_lib.MLB	2D3
PP1V35_USB_VDD_N	PP1V35_USB_VDD_N - @p4c_dev_lib.MLB	2D1 26D6
PP1V35_USB_VDD_P	PP1V35_USB_VDD_P - @p4c_dev_lib.MLB	2D1 26D8
PP1V35_VDD_CORE	PP1V35_VDD_CORE - @p4c_dev_lib.MLB	2A3 2D3 26D3
PP1V35_VDD_CORE_N	PP1V35_VDD_CORE_N - @p4c_dev_lib.MLB	2A1 26C6
PP1V35_VDD_CORE_P	PP1V35_VDD_CORE_P - @p4c_dev_lib.MLB	2A1 26C8
PP3V0_CODEC	PP3V0_CODEC - @p4c_dev_lib.MLB	8D4 11B3 15D5 26D3
PP3V0_IO	PP3V0_IO - @p4c_dev_lib.MLB	2B8 2C1 2C1 2C8 2D1 4B2 4D7 11B2 13C8 15A5 20D6 20D6 21A5 21B5 23C7 26D3
PP3V0_IO_ACCEL	PP3V0_IO_ACCEL - @p4c_dev_lib.MLB	13C7
PP3V0_LCD	PP3V0_LCD - @p4c_dev_lib.MLB	11B3 15D6 16A8 17C2 26D3
PP3V0_NAND	PP3V0_NAND - @p4c_dev_lib.MLB	4C3 11B1 15D3
PP3V0_NAND_N	PP3V0_NAND_N - @p4c_dev_lib.MLB	4C3 26C6
PP3V0_NAND_P	PP3V0_NAND_P - @p4c_dev_lib.MLB	4C3 26C8 26D3
PP3V0_NAND_VDD	PP3V0_NAND_VDD - @p4c_dev_lib.MLB	4B6 4B8 4C5 4D5

PP3V0_R_L_SYS	PP3V0_R_L_SYS - @p4c_dev_lib.MLB	2C2
PP3V0_SYS	PP3V0_SYS - @p4c_dev_lib.MLB	2C3
PP3V0_SYS_N	PP3V0_SYS_N - @p4c_dev_lib.MLB	2C1 26D6
PP3V0_SYS_P	PP3V0_SYS_P - @p4c_dev_lib.MLB	2D1 26D8
PP3V0_USB_AVDD	PP3V0_USB_AVDD - @p4c_dev_lib.MLB	2D2
PP3V0_USB_AVDD_N	PP3V0_USB_AVDD_N - @p4c_dev_lib.MLB	2D1 26D6
PP3V0_USB_AVDD_P	PP3V0_USB_AVDD_P - @p4c_dev_lib.MLB	2D1 26D8
PP3V0_VIDEO	PP3V0_VIDEO - @p4c_dev_lib.MLB	6D6 11B3 15D4
PP3V0_VIDEO_DAC	PP3V0_VIDEO_DAC - @p4c_dev_lib.MLB	5B8 5D8 6D3
PP3V0_VIDEO_DAC_N	PP3V0_VIDEO_DAC_N - @p4c_dev_lib.MLB	6D5 26C4
PP3V0_VIDEO_DAC_P	PP3V0_VIDEO_DAC_P - @p4c_dev_lib.MLB	6D5 26C5
PP3V3_ACC	PP3V3_ACC - @p4c_dev_lib.MLB	11B2 14C6 15D2 26D2
PP4V0_EXT_LDO	PP4V0_EXT_LDO - @p4c_dev_lib.MLB	9A7 9B7 14D8 14D8 15B8 15C8 15D4 15D8 22C6 22D6 22D6 22D7 22D8 24D5 28A5
PP4V0_TRITON	PP4V0_TRITON - @p4c_dev_lib.MLB	28A4 29A6
PP18V	PP18V - @p4c_dev_lib.MLB	17A5 17D5
PP18V_N	PP18V_N - @p4c_dev_lib.MLB	17B5 26D6
PP18V_P	PP18V_P - @p4c_dev_lib.MLB	17B5 26D8
PP18V_R	PP18V_R - @p4c_dev_lib.MLB	17A6
PROX_AMP_N	PROX_AMP_N - @p4c_dev_lib.MLB	23C3
PROX_AMP_P	PROX_AMP_P - @p4c_dev_lib.MLB	23D3
PROX_EN	PROX_EN - @p4c_dev_lib.MLB	15C5 16A3 17B3 23C8
PROX_EN_ONBOARD	PROX_EN_ONBOARD - @p4c_dev_lib.MLB	23C4 23C6 23D2
PROX_EN_R	PROX_EN_R - @p4c_dev_lib.MLB	15C4
PROX_EN_R_LED	PROX_EN_R_LED - @p4c_dev_lib.MLB	15C4
PROX_EN_Z2	PROX_EN_Z2 - @p4c_dev_lib.MLB	17B4 17C6
PROX_RX	PROX_RX - @p4c_dev_lib.MLB	16D8 17C8 23D8
	PROX_RX_ONBOARD - @p4c_dev_lib.MLB	23D2 23D7
PROX_RX_C	PROX_RX_C - @p4c_dev_lib.MLB	16D8
PROX_RX_IN	PROX_RX_IN - @p4c_dev_lib.MLB	17C8
PROX_TX	PROX_TX - @p4c_dev_lib.MLB	16C4 17C3 23D8
	PROX_TX_ONBOARD - @p4c_dev_lib.MLB	23C6 23D7
PROX_VSTM	PROX_VSTM - @p4c_dev_lib.MLB	17C3
PWE_N	PWE_N - @p4c_dev_lib.MLB	28A6 29B6
PWR_KEY*	PWR_KEY* - @p4c_dev_lib.MLB	11B8 12A5 25B5
PWR_KEYR_N	PWR_KEYR_N - @p4c_dev_lib.MLB	11B7
PXA270_JTAG_RESET	PXA270_JTAG_RESET - @p4c_dev_lib.MLB	28B2 29B5
PXA270_TCK	PXA270_TCK - @p4c_dev_lib.MLB	28B2 29D6
PXA270_TDI	PXA270_TDI - @p4c_dev_lib.MLB	28B2 29D8
PXA270_TDO	PXA270_TDO - @p4c_dev_lib.MLB	28B2 29D6
PXA270_TMS	PXA270_TMS - @p4c_dev_lib.MLB	28B2 29D8
PXA270_TRST_N	PXA270_TRST_N - @p4c_dev_lib.MLB	28B2 29D6
RADIO_AUDIO_RET_SNS	RADIO_AUDIO_RET_SNS - @p4c_dev_lib.MLB	20A7
RADIO_ON	RADIO_ON - @p4c_dev_lib.MLB	2C2 20B6 26B7 29B3
RADIO_ON_3V3	RADIO_ON_3V3 - @p4c_dev_lib.MLB	29B5 29C6
RCVR_1817_N	RCVR_1817_N - @p4c_dev_lib.MLB	8B1 12B7
RCVR_1817_P	RCVR_1817_P - @p4c_dev_lib.MLB	8B1 12B7
RCVR_CONN_N	RCVR_CONN_N - @p4c_dev_lib.MLB	7B2 8A2 12B7
RCVR_CONN_P	RCVR_CONN_P - @p4c_dev_lib.MLB	7B2 8A4 12B7
RCVR_LD	RCVR_LD - @p4c_dev_lib.MLB	7B1
RDYA	RDYA - @p4c_dev_lib.MLB	29A3 29B8
RDYB	RDYB - @p4c_dev_lib.MLB	28B6 29A3 29B8
RESET_DET_N	RESET_DET_N - @p4c_dev_lib.MLB	5D5 20B6 26B7 29B1
	RGB<23..0> - @p4c_dev_lib.MLB	5D5
RESET_DET_N_3V3	RESET_DET_N_3V3 - @p4c_dev_lib.MLB	29B3 29C8
RESET_L61_N	RESET_L61_N - @p4c_dev_lib.MLB	5C4 7C6
	RGB<23..0> - @p4c_dev_lib.MLB	5D5
RESET_N	RESET_N - @p4c_dev_lib.MLB	2A8 11C7 14C3 25A7 25D6 26C6
RESET_RC_N	RESET_RC_N - @p4c_dev_lib.MLB	2A7
RES_D1	RES_D1 - @p4c_dev_lib.MLB	25A5
RES_LINEIN_A_N	RES_LINEIN_A_N - @p4c_dev_lib.MLB	7B2 7D7
RES_LINEIN_A_P	RES_LINEIN_A_P - @p4c_dev_lib.MLB	7C2 7D7
RES_LINEIN_B_N	RES_LINEIN_B_N - @p4c_dev_lib.MLB	7B2 7D4
RES_LINEIN_B_P	RES_LINEIN_B_P - @p4c_dev_lib.MLB	7B2 7D4
RET_SENSE_L	RET_SENSE_L - @p4c_dev_lib.MLB	14B4
REXT_PROX	REXT_PROX - @p4c_dev_lib.MLB	23B3
RGB<23..0>	RGB<23..0> - @p4c_dev_lib.MLB	5D5
RGB<17>	RGB<17> - @p4c_dev_lib.MLB	5A7 5B6
RGB<18>	RGB<18> - @p4c_dev_lib.MLB	5A7 5B6
RGB<19>	RGB<19> - @p4c_dev_lib.MLB	5A7 5B6
RGB<20>	RGB<20> - @p4c_dev_lib.MLB	5A7 5B6
RGB<21>	RGB<21> - @p4c_dev_lib.MLB	5A7 5B6
RGB<22>	RGB<22> - @p4c_dev_lib.MLB	5A7 5B6
RGB<23>	RGB<23> - @p4c_dev_lib.MLB	5A7 5B6
RINGER_A	RINGER_A - @p4c_dev_lib.MLB	8B6 11B8 12B3
RINGER_A_R	RINGER_A_R - @p4c_dev_lib.MLB	11B7
RST_GPIO_DIR	RST_GPIO_DIR - @p4c_dev_lib.MLB	29A3 29D8
RTS_CTS	RTS_CTS - @p4c_dev_lib.MLB	22B7
R_LINE_IN_CONN	R_LINE_IN_CONN - @p4c_dev_lib.MLB	14A5 14B2
SDRAM+1.8V_1817	SDRAM+1.8V_1817 - @p4c_dev_lib.MLB	8B6 8B7 8C6 8D5 8D6
SDRAM+1.8V_J	SDRAM+1.8V_J - @p4c_dev_lib.MLB	26D2
SDRAM_LED	SDRAM_LED - @p4c_dev_lib.MLB	15B7
SDRAM_LED_D	SDRAM_LED_D - @p4c_dev_lib.MLB	15B7
SFLASH_CS_N	SFLASH_CS_N - @p4c_dev_lib.MLB	4B3
SHDWN	SHDWN - @p4c_dev_lib.MLB	11B7 24B3 24D6 24D7
SIMCRD_CLK	SIMCRD_CLK - @p4c_dev_lib.MLB	13D6 13D7 20A6
SIMCRD_IO	SIMCRD_IO - @p4c_dev_lib.MLB	13D5 13D8 20A6
SIMCRD_RST	SIMCRD_RST - @p4c_dev_lib.MLB	13D6 13D7 20A6
SIM_DETECT	SIM_DETECT - @p4c_dev_lib.MLB	13D6 20A6
SIM_DETECT*	SIM_DETECT* - @p4c_dev_lib.MLB	13D7
SIM_VCC	SIM_VCC - @p4c_dev_lib.MLB	13D5 13D6 20B6
SMPOWER_SPKR_CONN_1817_N	SMPOWER_SPKR_CONN_1817_N - @p4c_dev_lib.MLB	8B2
SMPOWER_SPKR_CONN_1817_P	SMPOWER_SPKR_CONN_1817_P - @p4c_dev_lib.MLB	8B2
SMPOWER_SPKR_N	SMPOWER_SPKR_N - @p4c_dev_lib.MLB	8B3
SMPOWER_SPKR_P	SMPOWER_SPKR_P - @p4c_dev_lib.MLB	8B3
SPDIF_OUT	SPDIF_OUT - @p4c_dev_lib.MLB	3C5 26B7
SPKR_VQ	SPKR_VQ - @p4c_dev_lib.MLB VID_C - @p4c_dev_lib.MLB	7C4 6D6 14A5
SSPTXD2	SSPTXD2 - @p4c_dev_lib.MLB	29C8
SSPTXD3	SSPTXD3 - @p4c_dev_lib.MLB	29B8
STRP0_PU	STRP0_PU - @p4c_dev_lib.MLB	5A6
STRP1_PU	STRP1_PU - @p4c_dev_lib.MLB	5A6
STRP2_PU	STRP2_PU - @p4c_dev_lib.MLB	5A6
STRP3_PU	STRP3_PU - @p4c_dev_lib.MLB	5A6
SWI_BLCTRL	SWI_BLCTRL - @p4c_dev_lib.MLB	5A7 5B5 11B7
SWVBUCK3	SWVBUCK3 - @p4c_dev_lib.MLB	11C5
SW_BOOST	SW_BOOST - @p4c_dev_lib.MLB	11A6 11B5
SW_BUCK1	SW_BUCK1 - @p4c_dev_lib.MLB	11C5
SW_BUCK2	SW_BUCK2 - @p4c_dev_lib.MLB	11C5
TEST_CLOCK_24M	TEST_CLOCK_24M - @p4c_dev_lib.MLB	2A8 12A3
TEST_CLOCK_24M_CONN	TEST_CLOCK_24M_CONN - @p4c_dev_lib.MLB	12A2
TEST_H2	TEST_H2 - @p4c_dev_lib.MLB	2B6
TQ0	TQ0 - @p4c_dev_lib.MLB	3C7
TQ1	TQ1 - @p4c_dev_lib.MLB	3C7
TRACECLK	TRACECLK - @p4c_dev_lib.MLB	20B5 25D7
TRACEPKT<0>	TRACEPKT<0> - @p4c_dev_lib.MLB	20B4 25D7

TRACEPKT<1>	TRACEPKT<1> - @p4c_dev_lib.MLB	20B4 25D7
TRACEPKT<2>	TRACEPKT<2> - @p4c_dev_lib.MLB	20B4 25D7
TRACEPKT<3>	TRACEPKT<3> - @p4c_dev_lib.MLB	20B4 25D7
TRACEPKT<4>	TRACEPKT<4> - @p4c_dev_lib.MLB	20B4 25D7
TRACEPKT<5>	TRACEPKT<5> - @p4c_dev_lib.MLB	20B4 25D7
TRACEPKT<6>	TRACEPKT<6> - @p4c_dev_lib.MLB	20B4 25D7
TRACEPKT<7>	TRACEPKT<7> - @p4c_dev_lib.MLB	20B5 25D7
TRACESYNC	TRACESYNC - @p4c_dev_lib.MLB	20B4 25D7
TRIG_IN	TRIG_IN - @p4c_dev_lib.MLB	20B4 25D3 25D8
TRIG_OUT	TRIG_OUT - @p4c_dev_lib.MLB	25D3 25D7
TRITON_C1M	TRITON_C1M - @p4c_dev_lib.MLB	30C4
TRITON_C1P	TRITON_C1P - @p4c_dev_lib.MLB	30C4
TRITON_C2M	TRITON_C2M - @p4c_dev_lib.MLB	30C4
TRITON_C2P	TRITON_C2P - @p4c_dev_lib.MLB	30C4
TRITON_CTS	TRITON_CTS - @p4c_dev_lib.MLB	27C5
	RTS_N - @p4c_dev_lib.USBBRIDGE(i53_page27)	36C6
TRITON_ENEEP	TRITON_ENEEP - @p4c_dev_lib.MLB	28B4
TRITON_ICP_RXD	TRITON_ICP_RXD - @p4c_dev_lib.MLB	29C8 30B3
TRITON_ICP_RXD_RS232	TRITON_ICP_RXD_RS232 - @p4c_dev_lib.MLB	30B4
TRITON_ICP_RXD_RS232_B	TRITON_ICP_RXD_RS232_B - @p4c_dev_lib.MLB	30B3
TRITON_ICP_TXD	TRITON_ICP_TXD - @p4c_dev_lib.MLB	29C6 30B5
TRITON_ICP_TXD_RS232	TRITON_ICP_TXD_RS232 - @p4c_dev_lib.MLB	30B3
TRITON_ICP_TXD_RS232_B	TRITON_ICP_TXD_RS232_B - @p4c_dev_lib.MLB	30B3
TRITON_IOS0	TRITON_IOS0 - @p4c_dev_lib.MLB	28B4
TRITON_IOS1	TRITON_IOS1 - @p4c_dev_lib.MLB	28B4
TRITON_IOS2	TRITON_IOS2 - @p4c_dev_lib.MLB	28B4
TRITON_RBIAS	TRITON_RBIAS - @p4c_dev_lib.MLB	28D4
TRITON_RTS	TRITON_RTS - @p4c_dev_lib.MLB	27C5
	CTS_N - @p4c_dev_lib.USBBRIDGE(i53_page27)	36C6
TRITON_RXD	TRITON_RXD - @p4c_dev_lib.MLB	27C5
	USB_TO_UART - @p4c_dev_lib.USBBRIDGE(i53_page27)	36C5
TRITON_T2IN	TRITON_T2IN - @p4c_dev_lib.MLB	30B4
TRITON_TXD	TRITON_TXD - @p4c_dev_lib.MLB	27C5
	UART_TO_USB - @p4c_dev_lib.USBBRIDGE(i53_page27)	36C5
TRITON_VM	TRITON_VM - @p4c_dev_lib.MLB	30B4
TRITON_VP	TRITON_VP - @p4c_dev_lib.MLB	30C3
TRITON_X1_A	TRITON_X1_A - @p4c_dev_lib.MLB	28A4
TRITON_X1_B	TRITON_X1_B - @p4c_dev_lib.MLB	28A4
TRITON_X2	TRITON_X2 - @p4c_dev_lib.MLB	28A4
TW_ATN	TW_ATN - @p4c_dev_lib.MLB	2C3
TW_CLK	TW_CLK - @p4c_dev_lib.MLB	2C3
U6_2	U6_2 - @p4c_dev_lib.MLB	29C4
U6_3	U6_3 - @p4c_dev_lib.MLB	29C4
U6_6	U6_6 - @p4c_dev_lib.MLB	29C4
U6_7	U6_7 - @p4c_dev_lib.MLB	29C4
U9_2	U9_2 - @p4c_dev_lib.MLB	29D4
U9_3	U9_3 - @p4c_dev_lib.MLB	29D4
U9_6	U9_6 - @p4c_dev_lib.MLB	29D4
U9_7	U9_7 - @p4c_dev_lib.MLB	29D4
U33_2	U33_2 - @p4c_dev_lib.MLB	29B4
U33_3	U33_3 - @p4c_dev_lib.MLB	29A4
U33_5	U33_5 - @p4c_dev_lib.MLB	29A4
U33_6	U33_6 - @p4c_dev_lib.MLB	29A4
U33_7	U33_7 - @p4c_dev_lib.MLB	29B4
U34_2	U34_2 - @p4c_dev_lib.MLB	29B4
U34_3	U34_3 - @p4c_dev_lib.MLB	29B4
U34_5	U34_5 - @p4c_dev_lib.MLB	29B4
U34_6	U34_6 - @p4c_dev_lib.MLB	29B4
U34_7	U34_7 - @p4c_dev_lib.MLB	29B4
U37_2	U37_2 - @p4c_dev_lib.MLB	29B2
U37_3	U37_3 - @p4c_dev_lib.MLB	29A2
U37_5	U37_5 - @p4c_dev_lib.MLB	29A2
U37_6	U37_6 - @p4c_dev_lib.MLB	29A1
U37_7	U37_7 - @p4c_dev_lib.MLB	29A1
U38_2	U38_2 - @p4c_dev_lib.MLB	29C2
U38_3	U38_3 - @p4c_dev_lib.MLB	29C2
U38_6	U38_6 - @p4c_dev_lib.MLB	29C1
U38_7	U38_7 - @p4c_dev_lib.MLB	29C1
U39_2	U39_2 - @p4c_dev_lib.MLB	29B2
U39_3	U39_3 - @p4c_dev_lib.MLB	29B2
U39_6	U39_6 - @p4c_dev_lib.MLB	29B1
U39_7	U39_7 - @p4c_dev_lib.MLB	29B1
U40_2	U40_2 - @p4c_dev_lib.MLB	29D2
U40_3	U40_3 - @p4c_dev_lib.MLB	29D2
U40_6	U40_6 - @p4c_dev_lib.MLB	29D1
U40_7	U40_7 - @p4c_dev_lib.MLB	29D1
UART1_BRIDGE_CTS_N	UART1_BRIDGE_CTS_N - @p4c_dev_lib.MLB	22C4 22D3
	RTS_N - @p4c_dev_lib.USBBRIDGE(i1_page22)	32C6
UART1_BRIDGE_RTS_N	UART1_BRIDGE_RTS_N - @p4c_dev_lib.MLB	22C4 22D5
	CTS_N - @p4c_dev_lib.USBBRIDGE(i1_page22)	32C6
UART1_BRIDGE_RXD	UART1_BRIDGE_RXD - @p4c_dev_lib.MLB	22D3 22D4
	USB_TO_UART - @p4c_dev_lib.USBBRIDGE(i1_page22)	32C5
UART1_BRIDGE_TXD	UART1_BRIDGE_TXD - @p4c_dev_lib.MLB	22C3 22D4 22D5
	UART_TO_USB - @p4c_dev_lib.USBBRIDGE(i1_page22)	32C5
UART1_TXD	UART1_TXD - @p4c_dev_lib.MLB	20D4 22C4 22C4
UART2_BRIDGE_RXD	UART2_BRIDGE_RXD - @p4c_dev_lib.MLB	22D1 22D2
	USB_TO_UART - @p4c_dev_lib.USBBRIDGE(i3_page22)	34C5
UART2_BRIDGE_TXD	UART2_BRIDGE_TXD - @p4c_dev_lib.MLB	22C1 22D2 22D3
	UART_TO_USB -	34C5
UART2_RXD	UART2_RXD - @p4c_dev_lib.MLB	20C5 22C2 22D2
UART2_TXD	UART2_TXD - @p4c_dev_lib.MLB	20C5 22C2 22C2
UART3_BRIDGE_CTS_N	UART3_BRIDGE_CTS_N - @p4c_dev_lib.MLB	22A4 22B3
	RTS_N - @p4c_dev_lib.USBBRIDGE(i26_page22)	33C6
UART3_BRIDGE_RTS_N	UART3_BRIDGE_RTS_N - @p4c_dev_lib.MLB	22A4 22B5
	CTS_N - @p4c_dev_lib.USBBRIDGE(i26_page22)	33C6
UART3_BRIDGE_RXD	UART3_BRIDGE_RXD - @p4c_dev_lib.MLB	22B3 22B4
	USB_TO_UART - @p4c_dev_lib.USBBRIDGE(i26_page22)	33C5
UART3_BRIDGE_TXD	UART3_BRIDGE_TXD - @p4c_dev_lib.MLB	22A3 22B4 22B5
	UART_TO_USB - @p4c_dev_lib.USBBRIDGE(i26_page22)	33C5
UFL_50OHM	UFL_50OHM - @p4c_dev_lib.MLB	24C7
UMTS_JTAG_RESET	UMTS_JTAG_RESET - @p4c_dev_lib.MLB	25D2
UMTS_RTCK	UMTS_RTCK - @p4c_dev_lib.MLB	20B4 25D2

UMTS_RXD	UMTS_RXD - @p4c_dev_lib.MLB	20B7 20C2
UMTS_RXD_CTRL	UMTS_RXD_CTRL - @p4c_dev_lib.MLB	5D4 20C4
	RGB<23..0> - @p4c_dev_lib.MLB	5D5
UMTS_TDI	UMTS_TDI - @p4c_dev_lib.MLB	20A5 25D2
UMTS_TDO	UMTS_TDO - @p4c_dev_lib.MLB	20A4 25D2
UMTS_TMS	UMTS_TMS - @p4c_dev_lib.MLB	20B4 25D2
UMTS_TRST_N	UMTS_TRST_N - @p4c_dev_lib.MLB	20B4 25D2
UMTS_TXD	UMTS_TXD - @p4c_dev_lib.MLB	20B7 20C4 20D8
USBC_CABLE_DET_3V3	USBC_CABLE_DET_3V3 - @p4c_dev_lib.MLB	29B8 30B5
USBC_CABLE_DET_3V3_B	USBC_CABLE_DET_3V3_B - @p4c_dev_lib.MLB	30B6
USBC_N	USBC_N - @p4c_dev_lib.MLB	29C6 30B7
USBC_N_J	USBC_N_J - @p4c_dev_lib.MLB	30B7
USBC_P	USBC_P - @p4c_dev_lib.MLB	29C6 30B7
USBC_P_J	USBC_P_J - @p4c_dev_lib.MLB	30B7
USBC_P_PULLUP	USBC_P_PULLUP - @p4c_dev_lib.MLB	29A8 30B7
USBH_N	USBH_N - @p4c_dev_lib.MLB	29C6
USBH_P	USBH_P - @p4c_dev_lib.MLB	29C6
USB_BRICKID	USB_BRICKID - @p4c_dev_lib.MLB	2C6 11C7 11D7
USB_DM	USB_DM - @p4c_dev_lib.MLB	2C6 14C4
USB_DM_DOCK	USB_DM_DOCK - @p4c_dev_lib.MLB	14C2
USB_DP	USB_DP - @p4c_dev_lib.MLB	2C6 14C4
USB_DP_DOCK	USB_DP_DOCK - @p4c_dev_lib.MLB	14C2
USB_PWR_NO_PROTECT	USB_PWR_NO_PROTECT - @p4c_dev_lib.MLB	13B8 14D4
USB_PWR_RPROT	USB_PWR_RPROT - @p4c_dev_lib.MLB	11C7 13B7
USB_PWR_SNS_R	USB_PWR_SNS_R - @p4c_dev_lib.MLB	15D7
USB_REXT	USB_REXT - @p4c_dev_lib.MLB	2C6
USB_SW_GATE	USB_SW_GATE - @p4c_dev_lib.MLB	13A7
USB_VBUS	USB_VBUS - @p4c_dev_lib.MLB	2C6
VBATT_SNS	VBATT_SNS - @p4c_dev_lib.MLB	11B7 24D2
VBIAS	VBIAS - @p4c_dev_lib.MLB	23C4 23D2
VBUCK2_1.8V	VBUCK2_1.8V - @p4c_dev_lib.MLB	11C2 11C4
VBUCK2_1.8V_N	VBUCK2_1.8V_N - @p4c_dev_lib.MLB	11C2 26D4
VBUCK2_1.8V_P	VBUCK2_1.8V_P - @p4c_dev_lib.MLB	11C2 26D3 26D5
VBUCK2_1.8V_P_J	VBUCK2_1.8V_P_J - @p4c_dev_lib.MLB	26D2
VBUCK2_FB	VBUCK2_FB - @p4c_dev_lib.MLB	11C5
VBUCK3	VBUCK3 - @p4c_dev_lib.MLB	11A3 11C2
VBUCK3_FB	VBUCK3_FB - @p4c_dev_lib.MLB	11C5
VBUS_OV	VBUS_OV - @p4c_dev_lib.MLB	11C7 13A6
VBUS_PROT	VBUS_PROT - @p4c_dev_lib.MLB	2C7 11C8 13B5 15D7
VCC_LAN_3V3	VCC_LAN_3V3 - @p4c_dev_lib.MLB	25B4 28A3 28A6 28A6 28C6 28D3 28D5
VCC_MAIN	VCC_MAIN - @p4c_dev_lib.MLB	7D1 9B4 11A2 11A3 11B8 11C2 11C8 11D5 11D8 12A5 12B4 12B5 13B4 24B3 24B4 24D6 24D6 26D2
VCC_MAIN_L61	VCC_MAIN_L61 - @p4c_dev_lib.MLB	7D2
VCC_MAIN_L61_N	VCC_MAIN_L61_N - @p4c_dev_lib.MLB	7D1 26D4
VCC_MAIN_L61_P	VCC_MAIN_L61_P - @p4c_dev_lib.MLB	7D1 26D5
VCC_TRITON_3V3	VCC_TRITON_3V3 - @p4c_dev_lib.MLB	25B4 28B2 28C8 29A2 29A4 29A6 29A8 29B2 29B2 29B5 29B6 29C2 29C4 29C5 29C6 29C6 29D2 29D4 29D6 29D8 29D8 29D8 30C4
VCC_TRITON_USBH	VCC_TRITON_USBH - @p4c_dev_lib.MLB	30B7
VCENTER	VCENTER - @p4c_dev_lib.MLB	11C7
VDD_1V8_L61	VDD_1V8_L61 - @p4c_dev_lib.MLB	7C8 7D7
VDD_1V8_L61_N	VDD_1V8_L61_N - @p4c_dev_lib.MLB	7D7 26D4
VDD_1V8_L61_P	VDD_1V8_L61_P - @p4c_dev_lib.MLB	7D7 26D5
VDD_ANA	VDD_ANA - @p4c_dev_lib.MLB	16B6
VDD_BUCK3	VDD_BUCK3 - @p4c_dev_lib.MLB	11C1 11C5
VDD_BUCK12	VDD_BUCK12 - @p4c_dev_lib.MLB	11C1 11C5
VDD_CAM_LDO	VDD_CAM_LDO - @p4c_dev_lib.MLB	11A2 11B2
VDD_CORE_1.35V_J	VDD_CORE_1.35V_J - @p4c_dev_lib.MLB	26D2
VDD_GRAPE_3V3	VDD_GRAPE_3V3 - @p4c_dev_lib.MLB	16C5
VDD_GRAPE_CORE	VDD_GRAPE_CORE - @p4c_dev_lib.MLB	16C6
VDD_H	VDD_H - @p4c_dev_lib.MLB	16B5
VDD_IO_3V_J	VDD_IO_3V_J - @p4c_dev_lib.MLB	26D2
VDD_L61_VA	VDD_L61_VA - @p4c_dev_lib.MLB	7D4
VDD_L61_VCP	VDD_L61_VCP - @p4c_dev_lib.MLB	7D4
VDD_L61_VDFILT	VDD_L61_VDFILT - @p4c_dev_lib.MLB	7D5
VDD_L61_VLCO	VDD_L61_VLCO - @p4c_dev_lib.MLB	7D5
VDD_L61_VMB	VDD_L61_VMB - @p4c_dev_lib.MLB	7D4
VDD_L61_VP	VDD_L61_VP - @p4c_dev_lib.MLB	7D4
VDD_LDO2	VDD_LDO2 - @p4c_dev_lib.MLB	11B1 11C5
VDD_LDO10	VDD_LDO10 - @p4c_dev_lib.MLB	11A1 11C5
VDD_LDO11	VDD_LDO11 - @p4c_dev_lib.MLB	11A1 11C5
VDD_LDO16	VDD_LDO16 - @p4c_dev_lib.MLB	11C1 11C5
VDD_LDO47	VDD_LDO47 - @p4c_dev_lib.MLB	11B1 11C5
VDD_LDO358	VDD_LDO358 - @p4c_dev_lib.MLB	11B1 11C5
VDD_PROX_INT_N	VDD_PROX_INT_N - @p4c_dev_lib.MLB	23B3 26C6
VDD_PROX_INT_P	VDD_PROX_INT_P - @p4c_dev_lib.MLB	23B3 26C8
VDD_PROX_TX	VDD_PROX_TX - @p4c_dev_lib.MLB	23D5
VDD_REF	VDD_REF - @p4c_dev_lib.MLB	11C7
VDD_RTC	VDD_RTC - @p4c_dev_lib.MLB	11C7
VDD_TOUCH	VDD_TOUCH - @p4c_dev_lib.MLB	11B1 23A6 23B4 23C2 23D3 23D6
VDD_TOUCH_INT	VDD_TOUCH_INT - @p4c_dev_lib.MLB	23B3
VDD_WLAN_FB	VDD_WLAN_FB - @p4c_dev_lib.MLB	25B2
VDD_WLAN_IN	VDD_WLAN_IN - @p4c_dev_lib.MLB	25B3
VDD_WLAN_JTAG	VDD_WLAN_JTAG - @p4c_dev_lib.MLB	25B2 25B3
VGATE	VGATE - @p4c_dev_lib.MLB	2B6
VHP	VHP - @p4c_dev_lib.MLB	11C6
VHPFILT+	VHPFILT+ - @p4c_dev_lib.MLB	7D5
VHPFILT-	VHPFILT- - @p4c_dev_lib.MLB	7D5
VHP_FLYC	VHP_FLYC - @p4c_dev_lib.MLB	7C6
VHP_FLYN	VHP_FLYN - @p4c_dev_lib.MLB	7C6
VHP_FLYP	VHP_FLYP - @p4c_dev_lib.MLB	7C6
VIBRATOR_CTRL	VIBRATOR_CTRL - @p4c_dev_lib.MLB	2B3 13C4
VIBRATOR_NEG	VIBRATOR_NEG - @p4c_dev_lib.MLB	13C3
VIDEO_AMP_EN	VIDEO_AMP_EN - @p4c_dev_lib.MLB	4B8 6C4
VIDEO_GND	VIDEO_GND - @p4c_dev_lib.MLB	5A8 6B4 6C3
VID_COMP	VID_COMP - @p4c_dev_lib.MLB	6C6 14A5
VID_Y	VID_Y - @p4c_dev_lib.MLB	6C6 14A5
VIO	VIO - @p4c_dev_lib.MLB	15D7 20B5 25D2
VMID_1817	VMID_1817 - @p4c_dev_lib.MLB	8B4
VOL_DWN*	VOL_DWN* - @p4c_dev_lib.MLB	2B3 12C3 25A6
VOL_UP*	VOL_UP* - @p4c_dev_lib.MLB	2B3 12C4 25A7
VR2_FB	VR2_FB - @p4c_dev_lib.MLB	24C4
VREF	VREF - @p4c_dev_lib.MLB	11C7
VREG_0P4V	VREG_0P4V - @p4c_dev_lib.MLB	3C7
VSW_CHG	VSW_CHG - @p4c_dev_lib.MLB	11D6
VVIB	VVIB - @p4c_dev_lib.MLB	20B7
V_N	V_N - @p4c_dev_lib.MLB	22C7
V_P	V_P - @p4c_dev_lib.MLB	22C7
WLAN_JTAG_PU	WLAN_JTAG_PU - @p4c_dev_lib.MLB	25B3
WLAN_JTAG_RESETN	WLAN_JTAG_RESETN - @p4c_dev_lib.MLB	25A3
WLAN_RESET	WLAN_RESET - @p4c_dev_lib.MLB	3C4 20B7 26B6
WLAN_RESET_TRITON_3V3	WLAN_RESET_TRITON_3V3 - @p4c_dev_lib.MLB	29C8
WLAN_RTCK	WLAN_RTCK - @p4c_dev_lib.MLB	25A2

```
WLAN_SDIO_CLK          WLAN_SDIO_CLK - @p4c_dev_lib.MLB    3C8 20B2
WLAN_SDIO_CLK_C        WLAN_SDIO_CLK_C - @p4c_dev_lib.MLB  20B3 20B6
WLAN_SDIO_CMD          WLAN_SDIO_CMD - @p4c_dev_lib.MLB    3C8 20B2
WLAN_SDIO_CMD_C        WLAN_SDIO_CMD_C - @p4c_dev_lib.MLB  20B3 20B6
WLAN_SDIO_DATA<0>      WLAN_SDIO_DATA<0> -                 3C8 20C2
                       @p4c_dev_lib.MLB
WLAN_SDIO_DATA<1>      WLAN_SDIO_DATA<1> -                 3C8 20C2
                       @p4c_dev_lib.MLB
WLAN_SDIO_DATA<2>      WLAN_SDIO_DATA<2> -                 3C8 20C2
                       @p4c_dev_lib.MLB
WLAN_SDIO_DATA<3>      WLAN_SDIO_DATA<3> -                 3C8 20C2
                       @p4c_dev_lib.MLB
WLAN_SDIO_DATA_C<0>    WLAN_SDIO_DATA_C<0> -               20B6 20C3
                       @p4c_dev_lib.MLB
WLAN_SDIO_DATA_C<1>    WLAN_SDIO_DATA_C<1> -               20B6 20C3
                       @p4c_dev_lib.MLB
WLAN_SDIO_DATA_C<2>    WLAN_SDIO_DATA_C<2> -               20B6 20C3
                       @p4c_dev_lib.MLB
WLAN_SDIO_DATA_C<3>    WLAN_SDIO_DATA_C<3> -               20B6 20C3
                       @p4c_dev_lib.MLB
WLAN_TCK               WLAN_TCK - @p4c_dev_lib.MLB         20A4 25A2
WLAN_TDI               WLAN_TDI - @p4c_dev_lib.MLB         20A4 25A3
WLAN_TDO               WLAN_TDO - @p4c_dev_lib.MLB         20A4 25A3
WLAN_TMS               WLAN_TMS - @p4c_dev_lib.MLB         20A4 25A2
WLAN_TRST_N            WLAN_TRST_N - @p4c_dev_lib.MLB      20A4 25A3
WLAN_UART_SOUT         WLAN_UART_SOUT - @p4c_dev_lib.MLB   20A4
WLED2_OUT              WLED2_OUT - @p4c_dev_lib.MLB        11A3 11B5
WLED_PWM               WLED_PWM - @p4c_dev_lib.MLB         11A2 11B5
XTAL_24M_I             XTAL_24M_I - @p4c_dev_lib.MLB       2A7 2B6
XTAL_24M_O             XTAL_24M_O - @p4c_dev_lib.MLB       2B6
XTAL_IN_24M            XTAL_IN_24M - @p4c_dev_lib.MLB      2A6 2A8
YIN                    YIN - @p4c_dev_lib.MLB              6C4
YOUT                   YOUT - @p4c_dev_lib.MLB             6B4 6C5
YOUT_SVID              YOUT_SVID - @p4c_dev_lib.MLB        6B4
Z2_1V8                 Z2_1V8 - @p4c_dev_lib.MLB           21D4
Z2_A_SDI               Z2_A_SDI - @p4c_dev_lib.MLB         17B2 17B6
Z2_A_SDO               Z2_A_SDO - @p4c_dev_lib.MLB         17B2 17B6
Z2_BON_L<0>            Z2_BON_L<0> - @p4c_dev_lib.MLB      17B4 17C6 17D4
Z2_BON_L<1>            Z2_BON_L<1> - @p4c_dev_lib.MLB      17B4 17C6 17D4
Z2_BOOST_EN            Z2_BOOST_EN - @p4c_dev_lib.MLB      17C6
Z2_BOOT_CFG<0>         Z2_BOOT_CFG<0> - @p4c_dev_lib.MLB   17B8
Z2_BOOT_CFG<1>         Z2_BOOT_CFG<1> - @p4c_dev_lib.MLB   17B8
Z2_B_ADR<0>            Z2_B_ADR<0> - @p4c_dev_lib.MLB      17B4 17D4 17D6
Z2_B_ADR<1>            Z2_B_ADR<1> - @p4c_dev_lib.MLB      17B4 17C6 17D4
Z2_B_ADR<2>            Z2_B_ADR<2> - @p4c_dev_lib.MLB      17B4 17C6 17D4
Z2_GPIO3_LED           Z2_GPIO3_LED - @p4c_dev_lib.MLB     15C5
Z2_GPIO3_R             Z2_GPIO3_R - @p4c_dev_lib.MLB       15C5
Z2_GPIO<3>             Z2_GPIO<3> - @p4c_dev_lib.MLB       15C6 17C6
Z2_GSM_TXBURST_IND_L   Z2_GSM_TXBURST_IND_L_LED -          15C3
_LED                   @p4c_dev_lib.MLB
Z2_GSM_TXBURST_IND_L   Z2_GSM_TXBURST_IND_L_R -            15C3
_R                     @p4c_dev_lib.MLB
Z2_HOST_INT_LED        Z2_HOST_INT_LED - @p4c_dev_lib.MLB  15C4
Z2_HOST_INT_N          Z2_HOST_INT_N - @p4c_dev_lib.MLB    12C8 17B2 17C5
Z2_HOST_INT_R          Z2_HOST_INT_R - @p4c_dev_lib.MLB    15C4
Z2_JTAG_17             Z2_JTAG_17 - @p4c_dev_lib.MLB       21D3
Z2_JTAG_19             Z2_JTAG_19 - @p4c_dev_lib.MLB       21C3
Z2_JTAG_RESET          Z2_JTAG_RESET - @p4c_dev_lib.MLB    21D3
Z2_JTAG_TCK            Z2_JTAG_TCK - @p4c_dev_lib.MLB      17C6 21D5
Z2_JTAG_TDI            Z2_JTAG_TDI - @p4c_dev_lib.MLB      17C6 21D5
Z2_JTAG_TDO            Z2_JTAG_TDO - @p4c_dev_lib.MLB      17C6 21D5
Z2_JTAG_TMS            Z2_JTAG_TMS - @p4c_dev_lib.MLB      17C6 21D6
Z2_JTAG_TMS_CONN       Z2_JTAG_TMS_CONN - @p4c_dev_lib.MLB 21D5 21D5
Z2_PANEL_CONFIG        Z2_PANEL_CONFIG - @p4c_dev_lib.MLB  17A5 17B2 17B6
Z2_PANEL_IN<0>         Z2_PANEL_IN<0> - @p4c_dev_lib.MLB   17A1 17A3 17D8
Z2_PANEL_IN<1>         Z2_PANEL_IN<1> - @p4c_dev_lib.MLB   17A1 17A3 17C8
Z2_PANEL_IN<2>         Z2_PANEL_IN<2> - @p4c_dev_lib.MLB   17A3 17B1 17C8
Z2_PANEL_IN<3>         Z2_PANEL_IN<3> - @p4c_dev_lib.MLB   17A3 17B1 17C8
Z2_PANEL_IN<4>         Z2_PANEL_IN<4> - @p4c_dev_lib.MLB   17A3 17B1 17C8
Z2_PANEL_IN<5>         Z2_PANEL_IN<5> - @p4c_dev_lib.MLB   17A3 17B1 17C8
Z2_PANEL_IN<6>         Z2_PANEL_IN<6> - @p4c_dev_lib.MLB   17A3 17B1 17C8
Z2_PANEL_IN<7>         Z2_PANEL_IN<7> - @p4c_dev_lib.MLB   17A1 17A3 17C8
Z2_PANEL_IN<8>         Z2_PANEL_IN<8> - @p4c_dev_lib.MLB   17A1 17A3 17C8
Z2_PANEL_IN<9>         Z2_PANEL_IN<9> - @p4c_dev_lib.MLB   17A1 17A3 17C8
Z2_RC                  Z2_RC - @p4c_dev_lib.MLB            21D7
Z2_RC_SEL              Z2_RC_SEL - @p4c_dev_lib.MLB        21D6
Z2_SPI1_CLK            Z2_SPI1_CLK - @p4c_dev_lib.MLB      12D8 17B2 17C5
Z2_SPI1_CS*            Z2_SPI1_CS* - @p4c_dev_lib.MLB      12D8 17B2 17C5
Z2_SPI1_MISO           Z2_SPI1_MISO - @p4c_dev_lib.MLB     12D8 17B2 17C5
Z2_SPI1_MOSI           Z2_SPI1_MOSI - @p4c_dev_lib.MLB     12D8 17B2 17C5
Z2_TM<0>               Z2_TM<0> - @p4c_dev_lib.MLB         17B6 21D5
Z2_TM<1>               Z2_TM<1> - @p4c_dev_lib.MLB         17B6
Z2_TRST_N              Z2_TRST_N - @p4c_dev_lib.MLB        21D4
Z2_VDDANA              Z2_VDDANA - @p4c_dev_lib.MLB        17D7
Z2_VDDCORE             Z2_VDDCORE - @p4c_dev_lib.MLB       17D8
Z2_VSTM_OUT<0>         Z2_VSTM_OUT<0> - @p4c_dev_lib.MLB   17A1 17A3 17D3
Z2_VSTM_OUT<1>         Z2_VSTM_OUT<1> - @p4c_dev_lib.MLB   17A1 17A3 17D3
Z2_VSTM_OUT<2>         Z2_VSTM_OUT<2> - @p4c_dev_lib.MLB   17A1 17A3 17D3
Z2_VSTM_OUT<3>         Z2_VSTM_OUT<3> - @p4c_dev_lib.MLB   17A3 17A5 17D3
Z2_VSTM_OUT<4>         Z2_VSTM_OUT<4> - @p4c_dev_lib.MLB   17A3 17A5 17C3
Z2_VSTM_OUT<5>         Z2_VSTM_OUT<5> - @p4c_dev_lib.MLB   17A3 17A5 17C3
Z2_VSTM_OUT<6>         Z2_VSTM_OUT<6> - @p4c_dev_lib.MLB   17A3 17A5 17C3
Z2_VSTM_OUT<7>         Z2_VSTM_OUT<7> - @p4c_dev_lib.MLB   17A3 17A5 17C3
Z2_VSTM_OUT<8>         Z2_VSTM_OUT<8> - @p4c_dev_lib.MLB   17A5 17B3 17C3
Z2_VSTM_OUT<9>         Z2_VSTM_OUT<9> - @p4c_dev_lib.MLB   17A5 17B3 17C3
Z2_VSTM_OUT<10>        Z2_VSTM_OUT<10> - @p4c_dev_lib.MLB  17A5 17B3 17C3
Z2_VSTM_OUT<11>        Z2_VSTM_OUT<11> - @p4c_dev_lib.MLB  17A5 17B3 17C3
Z2_VSTM_OUT<12>        Z2_VSTM_OUT<12> - @p4c_dev_lib.MLB  17A3 17A5 17C3
Z2_VSTM_OUT<13>        Z2_VSTM_OUT<13> - @p4c_dev_lib.MLB  17A3 17A5 17C3
Z2_VSTM_OUT<14>        Z2_VSTM_OUT<14> - @p4c_dev_lib.MLB  17A3 17A5 17C3

Base nets and synonyms for
p4c_dev_lib.USBBRIDGE(@p4c_dev_lib.mlb(sch_1):page22_i1@usbbridge_design_lib.usbbr
idge(sch_1))
Base Signal            Synonyms                            Location([Zone][dir])

CBUS2                  CBUS2 - @p4c_dev_lib.USBBRIDGE      32B6
CBUS3                  CBUS3 - @p4c_dev_lib.USBBRIDGE      32B6
CBUS4                  CBUS4 - @p4c_dev_lib.USBBRIDGE      32B6
CTS_N                  UART1_BRIDGE_RTS_N -                22C4 22D5
                       @p4c_dev_lib.MLB
                       CTS_N - @p4c_dev_lib.USBBRIDGE      32C6
DCD_N                  DCD_N - @p4c_dev_lib.USBBRIDGE      32B6
DSR_N                  DSR_N - @p4c_dev_lib.USBBRIDGE      32B6
DTR_N                  DTR_N - @p4c_dev_lib.USBBRIDGE      32B6
FB_1.8V                IO_SEL_C - @p4c_dev_lib.MLB         22D4
                       FB_1.8V - @p4c_dev_lib.USBBRIDGE    32D5
FT232_A_3V3OUT         FT232_A_3V3OUT -                    32A3 32B4
                       @p4c_dev_lib.USBBRIDGE
FT232_A_DM             FT232_A_DM - @p4c_dev_lib.USBBRIDGE 32C4
FT232_A_DM_CONN        FT232_A_DM_CONN -                   32C3
                       @p4c_dev_lib.USBBRIDGE
FT232_A_DP             FT232_A_DP - @p4c_dev_lib.USBBRIDGE 32A3 32C4
FT232_A_DP_CONN        FT232_A_DP_CONN -                   32C3
```

```
                       @p4c_dev_lib.USBBRIDGE
FT232_A_RESET*         FT232_A_RESET* -                    32B4
                       @p4c_dev_lib.USBBRIDGE
OSCI                   OSCI - @p4c_dev_lib.USBBRIDGE       32B4 32B5
OSCO                   OSCO - @p4c_dev_lib.USBBRIDGE       32B4 32B4
RI_N                   RI_N - @p4c_dev_lib.USBBRIDGE       32B6
RTS_N                  UART1_BRIDGE_CTS_N -                22C4 22D3
                       @p4c_dev_lib.MLB
                       RTS_N - @p4c_dev_lib.USBBRIDGE      32C6
RX_LED_A               RX_LED_A - @p4c_dev_lib.USBBRIDGE   32A6
RX_LED_CBUS_1          RX_LED_CBUS_1 -                     32A3 32B6
                       @p4c_dev_lib.USBBRIDGE
RX_LED_K               RX_LED_K - @p4c_dev_lib.USBBRIDGE   32A5
TX_LED_A               TX_LED_A - @p4c_dev_lib.USBBRIDGE   32A6
TX_LED_CBUS_0          TX_LED_CBUS_0 -                     32A4 32B6
                       @p4c_dev_lib.USBBRIDGE
TX_LED_K               TX_LED_K - @p4c_dev_lib.USBBRIDGE   32A5
UART_TO_USB            UART1_BRIDGE_TXD - @p4c_dev_lib.MLB 22C2 22D4 22D5
                       UART_TO_USB -                       32C5
                       @p4c_dev_lib.USBBRIDGE
USB_TO_UART            UART1_BRIDGE_RXD - @p4c_dev_lib.MLB 22D3 22D4
                       USB_TO_UART -                       32C5
                       @p4c_dev_lib.USBBRIDGE
VDDIO                  VDDIO - @p4c_dev_lib.USBBRIDGE      32C4 32C4
VDDIO_FB               IO_SEL_C - @p4c_dev_lib.MLB         22D4
                       VDDIO_FB - @p4c_dev_lib.USBBRIDGE   32C4
VDD_33                 VDD_33 - @p4c_dev_lib.USBBRIDGE     32A2 32B4
VDD_33A                VDD_33A - @p4c_dev_lib.USBBRIDGE    32A2 32B4
VUSB5_0_A              VUSB5_0_A - @p4c_dev_lib.USBBRIDGE  32A7 32B3 32C3 32C6

Base nets and synonyms for
p4c_dev_lib.USBBRIDGE(@p4c_dev_lib.mlb(sch_1):page22_i3@usbbridge_design_lib.usbbr
idge(sch_1))
Base Signal            Synonyms                            Location([Zone][dir])

CBUS2                  CBUS2 - @p4c_dev_lib.USBBRIDGE      34B6
CBUS3                  CBUS3 - @p4c_dev_lib.USBBRIDGE      34B6
CBUS4                  CBUS4 - @p4c_dev_lib.USBBRIDGE      34B6
CTS_N                  CTS_N - @p4c_dev_lib.USBBRIDGE      34C6
DCD_N                  DCD_N - @p4c_dev_lib.USBBRIDGE      34B6
DSR_N                  DSR_N - @p4c_dev_lib.USBBRIDGE      34B6
DTR_N                  DTR_N - @p4c_dev_lib.USBBRIDGE      34B6
FB_1.8V                IO_SEL_B - @p4c_dev_lib.MLB         22D2
                       FB_1.8V - @p4c_dev_lib.USBBRIDGE    34D5
FT232_A_3V3OUT         FT232_A_3V3OUT -                    34A3 34B4
                       @p4c_dev_lib.USBBRIDGE
FT232_A_DM             FT232_A_DM - @p4c_dev_lib.USBBRIDGE 34C4
FT232_A_DM_CONN        FT232_A_DM_CONN -                   34C3
                       @p4c_dev_lib.USBBRIDGE
FT232_A_DP             FT232_A_DP - @p4c_dev_lib.USBBRIDGE 34A3 34C4
FT232_A_DP_CONN        FT232_A_DP_CONN -                   34C3
                       @p4c_dev_lib.USBBRIDGE
FT232_A_RESET*         FT232_A_RESET* -                    34B4
                       @p4c_dev_lib.USBBRIDGE
OSCI                   OSCI - @p4c_dev_lib.USBBRIDGE       34B4 34B5
OSCO                   OSCO - @p4c_dev_lib.USBBRIDGE       34B4 34B4
RI_N                   RI_N - @p4c_dev_lib.USBBRIDGE       34B6
RTS_N                  RTS_N - @p4c_dev_lib.USBBRIDGE      34C6
RX_LED_A               RX_LED_A - @p4c_dev_lib.USBBRIDGE   34A6
RX_LED_CBUS_1          RX_LED_CBUS_1 -                     34A3 34B6
                       @p4c_dev_lib.USBBRIDGE
RX_LED_K               RX_LED_K - @p4c_dev_lib.USBBRIDGE   34A5
TX_LED_A               TX_LED_A - @p4c_dev_lib.USBBRIDGE   34A6
TX_LED_CBUS_0          TX_LED_CBUS_0 -                     34A4 34B6
                       @p4c_dev_lib.USBBRIDGE
TX_LED_K               TX_LED_K - @p4c_dev_lib.USBBRIDGE   34A5
UART_TO_USB            UART2_BRIDGE_TXD - @p4c_dev_lib.MLB 22C1 22D2 22D3
                       UART_TO_USB -                       34C5
                       @p4c_dev_lib.USBBRIDGE
USB_TO_UART            UART2_BRIDGE_RXD - @p4c_dev_lib.MLB 22D1 22D2
                       USB_TO_UART -                       34C5
                       @p4c_dev_lib.USBBRIDGE
VDDIO                  VDDIO - @p4c_dev_lib.USBBRIDGE      34C4 34C4
VDDIO_FB               IO_SEL_B - @p4c_dev_lib.MLB         22D2
                       VDDIO_FB - @p4c_dev_lib.USBBRIDGE   34C4
VDD_33                 VDD_33 - @p4c_dev_lib.USBBRIDGE     34A2 34B4
VDD_33A                VDD_33A - @p4c_dev_lib.USBBRIDGE    34A2 34B4
VUSB5_0_A              VUSB5_0_A - @p4c_dev_lib.USBBRIDGE  34A7 34B3 34C3 34C6

Base nets and synonyms for
p4c_dev_lib.USBBRIDGE(@p4c_dev_lib.mlb(sch_1):page22_i26@usbbridge_design_lib.usbb
ridge(sch_1))
Base Signal            Synonyms                            Location([Zone][dir])

CBUS2                  CBUS2 - @p4c_dev_lib.USBBRIDGE      33B6
CBUS3                  CBUS3 - @p4c_dev_lib.USBBRIDGE      33B6
CBUS4                  CBUS4 - @p4c_dev_lib.USBBRIDGE      33B6
CTS_N                  UART3_BRIDGE_RTS_N -                22A4 22B5
                       @p4c_dev_lib.MLB
                       CTS_N - @p4c_dev_lib.USBBRIDGE      33C6
DCD_N                  DCD_N - @p4c_dev_lib.USBBRIDGE      33B6
DSR_N                  DSR_N - @p4c_dev_lib.USBBRIDGE      33B6
DTR_N                  DTR_N - @p4c_dev_lib.USBBRIDGE      33B6
FB_1.8V                IO_SEL_A - @p4c_dev_lib.MLB         22B4
                       FB_1.8V - @p4c_dev_lib.USBBRIDGE    33D5
FT232_A_3V3OUT         FT232_A_3V3OUT -                    33A3 33B4
                       @p4c_dev_lib.USBBRIDGE
FT232_A_DM             FT232_A_DM - @p4c_dev_lib.USBBRIDGE 33C4
FT232_A_DM_CONN        FT232_A_DM_CONN -                   33C3
                       @p4c_dev_lib.USBBRIDGE
FT232_A_DP             FT232_A_DP - @p4c_dev_lib.USBBRIDGE 33A3 33C4
FT232_A_DP_CONN        FT232_A_DP_CONN -                   33C3
                       @p4c_dev_lib.USBBRIDGE
FT232_A_RESET*         FT232_A_RESET* -                    33B4
                       @p4c_dev_lib.USBBRIDGE
OSCI                   OSCI - @p4c_dev_lib.USBBRIDGE       33B4 33B5
OSCO                   OSCO - @p4c_dev_lib.USBBRIDGE       33B4 33B4
RI_N                   RI_N - @p4c_dev_lib.USBBRIDGE       33B6
RTS_N                  UART3_BRIDGE_CTS_N -                22A4 22B3
                       @p4c_dev_lib.MLB
                       RTS_N - @p4c_dev_lib.USBBRIDGE      33C6
RX_LED_A               RX_LED_A - @p4c_dev_lib.USBBRIDGE   33A6
RX_LED_CBUS_1          RX_LED_CBUS_1 -                     33A3 33B6
                       @p4c_dev_lib.USBBRIDGE
RX_LED_K               RX_LED_K - @p4c_dev_lib.USBBRIDGE   33A5
TX_LED_A               TX_LED_A - @p4c_dev_lib.USBBRIDGE   33A6
TX_LED_CBUS_0          TX_LED_CBUS_0 -                     33A4 33B6
                       @p4c_dev_lib.USBBRIDGE
TX_LED_K               TX_LED_K - @p4c_dev_lib.USBBRIDGE   33A5
UART_TO_USB            UART3_BRIDGE_TXD - @p4c_dev_lib.MLB 22A3 22B4 22B5
                       UART_TO_USB -                       33C5
                       @p4c_dev_lib.USBBRIDGE
USB_TO_UART            UART3_BRIDGE_RXD - @p4c_dev_lib.MLB 22B3 22B4
                       USB_TO_UART -                       33C5
```

```
                       @p4c_dev_lib.USBBRIDGE
VDDIO                  VDDIO - @p4c_dev_lib.USBBRIDGE      33C4 33C4
VDDIO_FB               IO_SEL_A - @p4c_dev_lib.MLB         22B4
                       VDDIO_FB - @p4c_dev_lib.USBBRIDGE   33C4
VDD_33                 VDD_33 - @p4c_dev_lib.USBBRIDGE     33A2 33B4
VDD_33A                VDD_33A - @p4c_dev_lib.USBBRIDGE    33A2 33B4
VUSB5_0_A              VUSB5_0_A - @p4c_dev_lib.USBBRIDGE  33A7 33B3 33C3 33C6

Base nets and synonyms for
p4c_dev_lib.USBBRIDGE(@p4c_dev_lib.mlb(sch_1):page22_i34@usbbridge_design_lib.usbb
ridge(sch_1))
Base Signal            Synonyms                            Location([Zone][dir])

CBUS2                  CBUS2 - @p4c_dev_lib.USBBRIDGE      35B6
CBUS3                  CBUS3 - @p4c_dev_lib.USBBRIDGE      35B6
CBUS4                  CBUS4 - @p4c_dev_lib.USBBRIDGE      35B6
CTS_N                  FTL232_GPIO3 - @p4c_dev_lib.MLB     22A7 22A7
                       CTS_N - @p4c_dev_lib.USBBRIDGE      35C6
DCD_N                  FTL232_GPIO6 - @p4c_dev_lib.MLB     22A7
                       DCD_N - @p4c_dev_lib.USBBRIDGE      35B6
DSR_N                  FTL232_GPIO5 - @p4c_dev_lib.MLB     22A7
                       DSR_N - @p4c_dev_lib.USBBRIDGE      35B6
DTR_N                  FTL232_GPIO4 - @p4c_dev_lib.MLB     22A7
                       DTR_N - @p4c_dev_lib.USBBRIDGE      35B6
FB_1.8V                IO_SEL_E - @p4c_dev_lib.MLB         22A6
                       FB_1.8V - @p4c_dev_lib.USBBRIDGE    35D5
FT232_A_3V3OUT         FT232_A_3V3OUT -                    35A3 35B4
                       @p4c_dev_lib.USBBRIDGE
FT232_A_DM             FT232_A_DM - @p4c_dev_lib.USBBRIDGE 35C4
FT232_A_DM_CONN        FT232_A_DM_CONN -                   35C3
                       @p4c_dev_lib.USBBRIDGE
FT232_A_DP             FT232_A_DP - @p4c_dev_lib.USBBRIDGE 35A3 35C4
FT232_A_DP_CONN        FT232_A_DP_CONN -                   35C3
                       @p4c_dev_lib.USBBRIDGE
FT232_A_RESET*         FT232_A_RESET* -                    35B4
                       @p4c_dev_lib.USBBRIDGE
OSCI                   OSCI - @p4c_dev_lib.USBBRIDGE       35B4 35B5
OSCO                   OSCO - @p4c_dev_lib.USBBRIDGE       35B4 35B4
RI_N                   FTL232_GPIO7 - @p4c_dev_lib.MLB     22A7
                       RI_N - @p4c_dev_lib.USBBRIDGE       35B6
RTS_N                  FTL232_GPIO2 - @p4c_dev_lib.MLB     22A5 22A7
                       RTS_N - @p4c_dev_lib.USBBRIDGE      35C6
RX_LED_A               RX_LED_A - @p4c_dev_lib.USBBRIDGE   36A6
RX_LED_CBUS_1          RX_LED_CBUS_1 -                     35A3 35B6
                       @p4c_dev_lib.USBBRIDGE
RX_LED_K               RX_LED_K - @p4c_dev_lib.USBBRIDGE   35A5
TX_LED_A               TX_LED_A - @p4c_dev_lib.USBBRIDGE   35A6
TX_LED_CBUS_0          TX_LED_CBUS_0 -                     35A4 35B6
                       @p4c_dev_lib.USBBRIDGE
TX_LED_K               TX_LED_K - @p4c_dev_lib.USBBRIDGE   35A5
UART_TO_USB            FTL232_GPIO1 - @p4c_dev_lib.MLB     22A7 22A7
                       UART_TO_USB -                       35C5
                       @p4c_dev_lib.USBBRIDGE
USB_TO_UART            FTL232_GPIO0 - @p4c_dev_lib.MLB     22A5 22A7
                       USB_TO_UART -                       35C5
                       @p4c_dev_lib.USBBRIDGE
VDDIO                  VDDIO - @p4c_dev_lib.USBBRIDGE      35C4 35C4
VDDIO_FB               IO_SEL_E - @p4c_dev_lib.MLB         22A6
                       VDDIO_FB - @p4c_dev_lib.USBBRIDGE   35C4
VDD_33                 VDD_33 - @p4c_dev_lib.USBBRIDGE     35A2 35B4
VDD_33A                VDD_33A - @p4c_dev_lib.USBBRIDGE    35A2 35B4
VUSB5_0_A              VUSB5_0_A - @p4c_dev_lib.USBBRIDGE  35A7 35B3 35C3 35C6

Base nets and synonyms for
p4c_dev_lib.USBBRIDGE(@p4c_dev_lib.mlb(sch_1):page27_i53@usbbridge_design_lib.usbb
ridge(sch_1))
Base Signal            Synonyms                            Location([Zone][dir])

CBUS2                  CBUS2 - @p4c_dev_lib.USBBRIDGE      36B6
CBUS3                  CBUS3 - @p4c_dev_lib.USBBRIDGE      36B6
CBUS4                  CBUS4 - @p4c_dev_lib.USBBRIDGE      36B6
CTS_N                  TRITON_RTS - @p4c_dev_lib.MLB       27C5
                       CTS_N - @p4c_dev_lib.USBBRIDGE      36C6
DCD_N                  DCD_N - @p4c_dev_lib.USBBRIDGE      36B6
DSR_N                  DSR_N - @p4c_dev_lib.USBBRIDGE      36B6
DTR_N                  DTR_N - @p4c_dev_lib.USBBRIDGE      36B6
FB_1.8V                FB_1.8V - @p4c_dev_lib.USBBRIDGE    36D5
FT232_A_3V3OUT         FT232_A_3V3OUT -                    36A3 36B4
                       @p4c_dev_lib.USBBRIDGE
FT232_A_DM             FT232_A_DM - @p4c_dev_lib.USBBRIDGE 36C4
FT232_A_DM_CONN        FT232_A_DM_CONN -                   36C3
                       @p4c_dev_lib.USBBRIDGE
FT232_A_DP             FT232_A_DP - @p4c_dev_lib.USBBRIDGE 36A3 36C4
FT232_A_DP_CONN        FT232_A_DP_CONN -                   36C3
                       @p4c_dev_lib.USBBRIDGE
FT232_A_RESET*         FT232_A_RESET* -                    36B4
                       @p4c_dev_lib.USBBRIDGE
OSCI                   OSCI - @p4c_dev_lib.USBBRIDGE       36B4 36B5
OSCO                   OSCO - @p4c_dev_lib.USBBRIDGE       36B4 36B4
RI_N                   RI_N - @p4c_dev_lib.USBBRIDGE       36B6
RTS_N                  TRITON_CTS - @p4c_dev_lib.MLB       27C5
                       RTS_N - @p4c_dev_lib.USBBRIDGE      36C6
RX_LED_A               RX_LED_A - @p4c_dev_lib.USBBRIDGE   36A6
RX_LED_CBUS_1          RX_LED_CBUS_1 -                     36A3 36B6
                       @p4c_dev_lib.USBBRIDGE
RX_LED_K               RX_LED_K - @p4c_dev_lib.USBBRIDGE   36A5
TX_LED_A               TX_LED_A - @p4c_dev_lib.USBBRIDGE   36A6
TX_LED_CBUS_0          TX_LED_CBUS_0 -                     36A4 36B6
                       @p4c_dev_lib.USBBRIDGE
TX_LED_K               TX_LED_K - @p4c_dev_lib.USBBRIDGE   36A5
UART_TO_USB            TRITON_TXD - @p4c_dev_lib.MLB       27C5
                       UART_TO_USB -                       36C5
                       @p4c_dev_lib.USBBRIDGE

                       USB_TO_UART -                       36C5
                       @p4c_dev_lib.USBBRIDGE
VDDIO                  VDDIO - @p4c_dev_lib.USBBRIDGE      36C4 36C4
VDDIO_FB               VDDIO_FB - @p4c_dev_lib.USBBRIDGE   36C4
VDD_33                 VDD_33 - @p4c_dev_lib.USBBRIDGE     36A2 36B4
VDD_33A                VDD_33A - @p4c_dev_lib.USBBRIDGE    36A2 36B4
VUSB5_0_A              VUSB5_0_A - @p4c_dev_lib.USBBRIDGE  36A7 36B3 36C3 36C6
```

Title: Cref Part Report
Design: mlb
Date: Feb 4 16:23:15 2008

C1	CAP_201	mlb[17D8]
C1_1	CAP_201	usbbridge[32C6]mlb[22]
C1_2	CAP_201	usbbridge[34C6]mlb[22]
C1_3	CAP_201	usbbridge[33C6]mlb[22]
C1_4	CAP_201	usbbridge[35C6]mlb[22]
C1_5	CAP_201	usbbridge[36C6]mlb[27]
C2	CAP_402	mlb[17D4]
C2_1	CAP_402-1	usbbridge[32C6]mlb[22]
C2_2	CAP_402-1	usbbridge[34C6]mlb[22]
C2_3	CAP_402-1	usbbridge[33C6]mlb[22]
C2_4	CAP_402-1	usbbridge[35C6]mlb[22]
C2_5	CAP_402-1	usbbridge[36C6]mlb[27]
C3	CAP_402	mlb[29A4]
C3_1	CAP_201	usbbridge[32A5]mlb[22]
C3_2	CAP_201	usbbridge[34A5]mlb[22]
C3_3	CAP_201	usbbridge[33A5]mlb[22]
C3_4	CAP_201	usbbridge[35A5]mlb[22]
C3_5	CAP_201	usbbridge[36A5]mlb[27]
C4	CAP_201	mlb[29D4]
C4_1	CAP_201	usbbridge[32A4]mlb[22]
C4_2	CAP_201	usbbridge[34A4]mlb[22]
C4_3	CAP_201	usbbridge[33A4]mlb[22]
C4_4	CAP_201	usbbridge[35A4]mlb[22]
C4_5	CAP_201	usbbridge[36A4]mlb[27]
C5	CAP_201	mlb[29D4]
C5_1	CAP_201	usbbridge[32B4]mlb[22]
C5_2	CAP_201	usbbridge[34B4]mlb[22]
C5_3	CAP_201	usbbridge[33B4]mlb[22]
C5_4	CAP_201	usbbridge[35B4]mlb[22]
C5_5	CAP_201	usbbridge[36B4]mlb[27]
C6	CAP_201	mlb[2C3]
C6_1	CAP_402-1	usbbridge[32C5]mlb[22]
C6_2	CAP_402-1	usbbridge[34C5]mlb[22]
C6_3	CAP_402-1	usbbridge[33C5]mlb[22]
C6_4	CAP_402-1	usbbridge[35C5]mlb[22]
C6_5	CAP_402-1	usbbridge[36C5]mlb[27]
C7	CAP_201	mlb[2A7]
C7_1	CAP_201	usbbridge[32B3]mlb[22]
C7_2	CAP_201	usbbridge[34B3]mlb[22]
C7_3	CAP_201	usbbridge[33B3]mlb[22]
C7_4	CAP_201	usbbridge[35B3]mlb[22]
C7_5	CAP_201	usbbridge[36B3]mlb[27]
C8	CAP_201	mlb[3D7]
C9	CAP_201	mlb[3C7]
C10	CAP_402-LF	mlb[29A4]
C11	CAP_0805	mlb[28D5]
C12	CAP_201	mlb[28D5]
C13	CAP_201	mlb[2A6]
C14	CAP_201	mlb[28D5]
C15	CAP_201	mlb[28A5]
C16	CAP_201	mlb[28D5]
C17	CAP_402-LF	mlb[4C4]
C18	CAP_201	mlb[28D4]
C19	CAP_402-1	mlb[28A4]
C20	CAP_201	mlb[28D4]
C21	CAP_402	mlb[28A3]
C22	CAP_402	mlb[28A3]
C23	CAP_201	mlb[3D6]
C24	CAP_201	mlb[3D6]
C25	CAP_201	mlb[3C3]
C26	CAP_402	mlb[28A3]
C27	CAP_201	mlb[3C2]
C28	CAP_402-LF	mlb[28A3]
C29	CAP_201	mlb[4D8]
C30	CAP_201	mlb[5D7]
C31	CAP_1206	mlb[28C2]
C32	CAP_1206	mlb[28B2]
C33	CAP_402	mlb[30C4]
C34	CAP_402	mlb[30C4]
C35	CAP_402	mlb[30B4]
C36	CAP_402	mlb[30C3]
C37	CAP_201	mlb[11D8]
C38	CAP_201	mlb[2A7]
C39	CAP_201	mlb[11A3]
C40	CAP_603	mlb[11C7]
C41	CAP_201	usbbridge[32A2]mlb[22]
C42	CAP_201	mlb[11A4]
C43	CAP_201	usbbridge[32A2]mlb[22]
C44	CAP_201	usbbridge[33A2]mlb[22]
C45	CAP_201	usbbridge[33A2]mlb[22]
C46	CAP_402	mlb[11B3]
C47	CAP_402	mlb[11B4]
C48	CAP_402	mlb[17A8]
C49	CAP_402	mlb[11B4]
C50	CAP_201	usbbridge[35A2]mlb[22]
C51	CAP_201	usbbridge[35A2]mlb[22]
C52	CAP_201	usbbridge[34A2]mlb[22]
C53	CAP_201	usbbridge[34A2]mlb[22]
C54	CAP_201	usbbridge[36A2]mlb[27]
C55	CAP_201	usbbridge[36A2]mlb[27]
C57	CAP_P_CASE-AL-SM1	mlb[10C8]
C58	CAP_402	mlb[11B3]
C59	CAP_402	mlb[8B2]
C60	CAP_402	mlb[8A2]
C61	CAP_201	mlb[8D1]
C63	CAP_P_CASE-B3-SM1	mlb[11D8]
C64	CAP_201	mlb[8C1]
C65	CAP_402	mlb[11B2]
C66	CAP_201	mlb[11C3]
C67	CAP_805	mlb[11A5]
C68	CAP_402	mlb[11B2]
C69	CAP_402	mlb[11B2]
C70	CAP_402	mlb[11B2]
C71	CAP_SM	mlb[16D8]
C72	CAP_201	mlb[4C5]
C73	CAP_201	mlb[8C1]
C74	CAP_201	mlb[4C5]
C75	CAP_201	mlb[8C1]
C82	CAP_201	mlb[11D6]
C83	CAP_201	mlb[11D5]
C84	CAP_201	mlb[8B1]
C86	CAP_201	mlb[8B1]
C89	CAP_201	mlb[10D6]
C91	CAP_201	mlb[10C6]
C127	CAP_201	mlb[13D3]
C128	CAP_201	mlb[17C8]
C129	CAP_402	mlb[17D6]
C143	CAP_201	mlb[5B8]
C145	CAP_603	mlb[6D3]
C147	CAP_201	mlb[6D3]
C148	CAP_P_CASE-AL-SM1	mlb[10C8]
C152	CAP_201	mlb[6C5]
C157	CAP_P_0603-SM	mlb[8A6]
C158	CAP_P_0603-SM	mlb[8B6]
C160	CAP_603	mlb[11D7]
C163	CAP_201	mlb[11A6]
C164	CAP_402	mlb[11B3]
C165	CAP_P_0603-SM	mlb[8B3]
C168	CAP_603	mlb[11C4]
C171	CAP_603	mlb[17D4]
C175	CAP_201	mlb[21D2]
C176	CAP_402	mlb[11D7]
C178	CAP_603	mlb[11A3]
C179	CAP_201	mlb[25C4]
C180	CAP_201	mlb[25C2]
C183	CAP_201	mlb[14B4]
C184	CAP_201	mlb[14B4]
C185	CAP_201	mlb[14B3]
C186	CAP_201	mlb[14B3]
C187	CAP_402-1	mlb[22D8]
C188	CAP_402	mlb[14D4]
C190	CAP_402	mlb[22C8]
C191	CAP_402	mlb[22C8]
C192	CAP_402	mlb[22C7]
C193	CAP_402	mlb[22D7]
C194	CAP_402-1	mlb[22D7]
C195	CAP_402	mlb[22C7]
C196	CAP_603	mlb[17D8]
C197	CAP_201	mlb[25C5]
C198	CAP_402-LF	mlb[17D7]
C200	CAP_402	mlb[14D3]
C201	CAP_201	mlb[17D7]
C202	CAP_201	mlb[17D6]
C204	CAP_201	mlb[25D4]
C205	CAP_402	mlb[17D6]
C206	CAP_201	mlb[23D4]
C207	CAP_201	mlb[10B4]
C208	CAP_201	mlb[17D3]
C210	CAP_402-1	mlb[25B3]
C211	CAP_402-1	mlb[25B2]
C212	CAP_201	mlb[13D6]
C213	CAP_P_CASE-B3-SM1	mlb[24C4]
C214	CAP_P_CASE-B3-SM1	mlb[20B3]
C215	CAP_P_CASE-B3-SM1	mlb[24C4]
C216	CAP_P_CASE-B3-SM1	mlb[20B3]
C217	CAP_P_CASE-B3-SM1	mlb[24B2]
C219	CAP_P_CASE-B3-SM1	mlb[24B2]
C220	CAP_402-LF	mlb[13C7]
C221	CAP_201	mlb[13C7]
C223	CAP_402-1	mlb[29A6]
C224	CAP_201	mlb[29B4]
C225	CAP_201	mlb[29C4]
C226	CAP_201	mlb[29C4]
C227	CAP_201	mlb[29B4]
C228	CAP_402	mlb[22D6]
C229	CAP_402	mlb[15B5]
C230	CAP_201	mlb[29C4]
C231	CAP_201	mlb[29C4]
C232	CAP_201	mlb[29C2]
C233	CAP_201	mlb[29C2]
C234	CAP_201	mlb[29B2]
C235	CAP_201	mlb[29D2]
C236	CAP_201	mlb[29C1]
C239	CAP_201	mlb[29C1]
C240	CAP_201	mlb[29B1]
C241	CAP_201	mlb[29D1]
C243	CAP_603	mlb[11C7]
C245	CAP_201	mlb[7D6]
C251	CAP_201	mlb[7A5]
C252	CAP_P_0603-SM	mlb[8B7]
C253	CAP_P_0603-SM	mlb[8A7]
C254	CAP_402	mlb[8B8]
C255	CAP_402	mlb[8B8]
C256	CAP_402	mlb[8C8]
C258	CAP_402	mlb[8C8]
C259	CAP_402	mlb[7D6]
C262	CAP_201	mlb[7D4]
C263	CAP_201	mlb[7D3]
C264	CAP_201	mlb[8B7]
C265	CAP_603	mlb[7D3]
C266	CAP_603	mlb[7D3]
C267	CAP_201	mlb[8B7]
C268	CAP_201	mlb[8C5]
C269	CAP_201	mlb[8D5]
C270	CAP_402-1	mlb[8C5]
C271	CAP_201	mlb[8C5]
C272	CAP_201	mlb[8D5]
C273	CAP_P_0603-SM	mlb[8B4]
C274	CAP_P_0603-SM	mlb[8B4]
C275	CAP_201	mlb[8D2]
C277	CAP_201	mlb[8D2]
C279	CAP_201	mlb[9B4]
C284	CAP_402	mlb[30C3]
C285	CAP_201	mlb[23C3]
C286	CAP_201	mlb[9B3]
C287	CAP_201	mlb[23D3]
C288	CAP_201	mlb[23C3]
C289	CAP_402-LF	mlb[23D5]
C290	CAP_201	mlb[10B3]
C291	CAP_402	mlb[11C1]
C292	CAP_402	mlb[11C1]
C298	CAP_402	mlb[11B1]
C299	CAP_402	mlb[11B1]
C300	CAP_402	mlb[15B7]
C301	CAP_402	mlb[11A1]
C304	CAP_201	mlb[17A7]
C305	CAP_201	mlb[17A6]
C306	CAP_603	mlb[17A5]
C310	CAP_201	mlb[16C7]
C311	CAP_603	mlb[16A8]
C312	CAP_201	mlb[16A7]
C313	CAP_603	mlb[16A8]
C314	CAP_201	mlb[16A7]
C315	CAP_201	mlb[16C1]
C316	CAP_201	mlb[11A7]
C317	CAP_603	mlb[25C4]
C318	CAP_201	mlb[25C3]
C319	CAP_201	mlb[25C3]
C320	CAP_402-LF	mlb[2C7]
C321	CAP_201	mlb[23A7]
C322	CAP_201	mlb[2C6]
C324	CAP_201	mlb[2C6]
C326	CAP_201	mlb[8A3]
C327	CAP_201	mlb[8A3]
C328	CAP_201	mlb[17B5]
C329	CAP_201	mlb[2D6]
C330	CAP_201	mlb[2C3]
C331	CAP_201	mlb[2D3]
C332	CAP_201	mlb[2D3]
C333	CAP_201	mlb[2D3]
C337	CAP_201	mlb[3C3]
C340	CAP_201	mlb[2A5]
C343	CAP_201	mlb[3C3]
C346	CAP_201	mlb[2A5]
C347	CAP_201	mlb[3D3]
C348	CAP_201	mlb[3C3]
C351	CAP_201	mlb[3C3]
C354	CAP_201	mlb[2A4]
C355	CAP_201	mlb[3D3]
C356	CAP_201	mlb[3C3]
C361	CAP_402	mlb[8C8]
C363	CAP_402	mlb[8C8]
C364	CAP_201	mlb[2A4]
C365	CAP_201	mlb[3D3]
C366	CAP_201	mlb[3C3]
C370	CAP_P_603-SM	mlb[8D2]
C371	CAP_P_603-SM	mlb[8C2]
C373	CAP_201	mlb[2A4]
C374	CAP_201	mlb[3D2]
C379	CAP_201	mlb[2A4]
C380	CAP_402-LF	mlb[3D2]
C383	CAP_201	mlb[2A4]
C386	CAP_201	mlb[3C2]
C387	CAP_603-3	mlb[2A3]
C388	CAP_201	mlb[3C2]
C390	CAP_201	mlb[3C2]
C392	CAP_201	mlb[3C2]
C393	CAP_201	mlb[2A3]
C395	CAP_201	mlb[2A3]
C397	CAP_201	mlb[4B3]
C398	CAP_201	mlb[3D7]
C399	CAP_201	mlb[5D7]
C401	CAP_201	mlb[5D6]
C402	CAP_201	mlb[5B8]
C403	CAP_201	mlb[7A7]
C404	CAP_201	mlb[7A7]
C405	CAP_201	mlb[7B2]
C406	CAP_201	mlb[7B2]
C407	CAP_201	mlb[7B7]
C408	CAP_P_603-SM	mlb[7A7]
C409	CAP_P_603-SM	mlb[7A7]
C410	CAP_P_603-SM	mlb[7A7]
C411	CAP_201	mlb[7D7]
C412	CAP_402	mlb[7D6]
C413	CAP_201	mlb[7D6]
C414	CAP_402	mlb[7C6]
C415	CAP_402	mlb[7C6]
C416	CAP_402	mlb[7D5]
C417	CAP_201	mlb[7A5]
C418	CAP_201	mlb[7A5]
C419	CAP_201	mlb[7A5]
C420	CAP_P_603-SM	mlb[7A4]
C421	CAP_201	mlb[7A4]
C422	CAP_201	mlb[7A4]
C423	CAP_P_603-SM	mlb[7A4]
C424	CAP_402	mlb[7D4]
C425	CAP_201	mlb[7A4]
C426	CAP_201	mlb[7A4]
C427	CAP_P_603-SM	mlb[7A4]
C428	CAP_201	mlb[7B4]
C429	CAP_201	mlb[7B4]
C430	CAP_402	mlb[7A3]
C431	CAP_201	mlb[7B3]
C432	CAP_201	mlb[7B3]
C433	CAP_402	mlb[7A3]
C437	CAP_402	mlb[7A3]
C438	CAP_P_603-SM	mlb[7C2]
C439	CAP_402-LF	mlb[7A2]
C440	CAP_P_603-SM	mlb[7C2]
C442	CAP_201	mlb[7B8]
C443	CAP_201	mlb[7B8]
C444	CAP_201	mlb[7C1]
C445	CAP_201	mlb[7C1]
C447	CAP_201	mlb[7C1]
C448	CAP_201	mlb[7C1]
C449	CAP_201	mlb[9B8]
C450	CAP_201	mlb[9B7]
C451	CAP_201	mlb[9B3]
C452	CAP_201	mlb[10B3]
C453	CAP_603	mlb[11C8]
C454	CAP_201	mlb[11C8]
C455	CAP_201	mlb[11C7]
C456	CAP_402	mlb[11C7]
C457	CAP_201	mlb[11C7]
C458	CAP_603	mlb[11D7]
C459	CAP_402	mlb[11B4]
C460	CAP_402	mlb[11B4]
C462	CAP_402	mlb[11B3]
C463	CAP_603	mlb[11C3]
C464	CAP_402	mlb[11B3]
C465	CAP_201	mlb[11C3]
C466	CAP_603	mlb[11C3]
C467	CAP_201	mlb[11C2]
C473	CAP_402	mlb[11B1]
C474	CAP_402	mlb[11A1]
C475	CAP_402-LF	mlb[16C8]
C476	CAP_201	mlb[16C8]
C478	CAP_402	mlb[16C7]
C479	CAP_402	mlb[16B6]
C480	CAP_402-LF	mlb[16B6]
C481	CAP_201	mlb[16B6]
C482	CAP_402-LF	mlb[16B5]
C483	CAP_201	mlb[16B5]
C500	CAP_603	mlb[21D7]
C501	CAP_201	mlb[21D7]
C502	CAP_201	mlb[21D7]
C503	CAP_201	mlb[7C6]
C504	CAP_201	mlb[7C6]
C505	CAP_201	mlb[7C6]
C506	CAP_201	mlb[7D4]
C507	CAP_P_0603-SM	mlb[7C3]
C508	CAP_P_0603-SM	mlb[7B3]
C509	CAP_P_0603-SM	mlb[7B3]
C510	CAP_P_0603-SM	mlb[7B3]
C511	CAP_201	mlb[7C1]
C512	CAP_201	mlb[7C1]
C522	CAP_603	mlb[9D5]
C523	CAP_201	mlb[9A3]
C524	CAP_201	mlb[9B2]
C525	CAP_402-LF	mlb[9A2]
C526	CAP_201	mlb[9A2]
C527	CAP_201	mlb[20D7]
C528	CAP_201	mlb[20D7]
C529	CAP_201	mlb[20D5]
C530	CAP_201	mlb[20D5]
C531	CAP_201	mlb[20D2]
C532	CAP_201	mlb[20C2]
C534	CAP_201	mlb[2A5]
C535	CAP_201	mlb[2A5]
C536	CAP_201	mlb[2A4]
C537	CAP_201	mlb[2A4]
C538	CAP_201	mlb[2A4]
C539	CAP_201	mlb[2A4]
C540	CAP_201	mlb[2A3]
C541	CAP_201	mlb[2A3]
C542	CAP_201	mlb[2A3]
C562	CAP_201	mlb[23B2]
C563	CAP_402-1	mlb[23B2]
C564	CAP_402-LF	mlb[13B3]
C565	CAP_402-LF	mlb[13B2]
C566	CAP_402-LF	mlb[13B1]
C567	CAP_201	mlb[16B6]
C568	CAP_201	mlb[16B6]
C570	CAP_201	mlb[7C8]
C571	CAP_201	mlb[7C8]
C572	CAP_201	mlb[7D6]
C573	CAP_201	mlb[7D5]
C574	CAP_201	mlb[12A2]
D1	DIODE_SCHOT_POWERDI-123	mlb[24C4]
D3	DIODE_SCHOT_POWERDI-123	mlb[24C4]
D4	DIODE_SCHOT_POWERDI-123	mlb[24B2]
D5	DIODE_SCHOT_POWERDI-123	mlb[24B2]
D6	DIODE_SCHOT_SM-201	mlb[17A6]
D12	DIODE_SCHOT_SM	mlb[11D6]
D13	DIODE_SCHOT_2P_SOD-923-HF	mlb[13B2]
DS1	LED_0603	mlb[28C4]
DS1_1	LED_0603	usbbridge[32A5]mlb[22]
DS1_2	LED_0603	usbbridge[34A5]mlb[22]
DS1_3	LED_0603	usbbridge[33A5]mlb[22]
DS1_4	LED_0603	usbbridge[35A5]mlb[22]
DS1_5	LED_0603	usbbridge[36A5]mlb[27]
DS2	LED_0603	mlb[28C4]
DS2_1	LED_0603	usbbridge[32A5]mlb[22]
DS2_2	LED_0603	usbbridge[34A5]mlb[22]
DS2_3	LED_0603	usbbridge[33A5]mlb[22]
DS2_4	LED_0603	usbbridge[35A5]mlb[22]
DS2_5	LED_0603	usbbridge[36A5]mlb[27]
DS3	LED_0603	mlb[22C5]
DS4	LED_0603	mlb[22D5]
DS5	LED_0603	mlb[15B8]
DS6	LED_0603	mlb[15B7]
DS7	LED_0603	mlb[15B7]
DS8	LED_0603	mlb[15B6]
DS9	LED_0603	mlb[15B5]
DS10	LED_0603	mlb[15D3]
DS11	LED_0603	mlb[15D7]
DS12	LED_0603	mlb[15D2]
DS13	LED_0603	mlb[15D1]
DS14	LED_0603	mlb[15D6]
DS15	LED_0603	mlb[15D5]
DS16	LED_SM	mlb[23C5]
DS17	LED_0603	mlb[15C7]
DS18	LED_0603	mlb[15C6]
DS19	LED_0603	mlb[15C5]
DS20	LED_0603	mlb[15C4]
DS21	LED_0603	mlb[15C4]
DS22	LED_0603	mlb[15C3]
DS24	LED_0603	mlb[15D8]
DS25	LED_0603	mlb[15D4]
DS28	LED_0603	mlb[9B6]
DS29	LED_0603	mlb[9A6]
DS30	LED_0603	mlb[14D7]
DS31	LED_0603	mlb[14C7]
DS32	LED_0603	mlb[15B4]
DS33	LED_0603	mlb[15B3]
DS36	LED_SM	mlb[23A3]
DZ1	ZENER_GDZ-0201	mlb[13A7]
DZ2	SUPPR_NUP412VP5_SOT953	mlb[14D3]
DZ3	SUPPR_NUP412VP5_SOT953	mlb[13D5]
DZ4	SUPPR_TRANSIENT1_201	mlb[10C5]
DZ5	SUPPR_TRANSIENT1_201	mlb[10C4]
DZ6	SUPPR_TRANSIENT1_201	mlb[10D4]
DZ7	SUPPR_TRANSIENT1_201	mlb[14B4]
DZ8	SUPPR_TRANSIENT1_201	mlb[14A6]
DZ9	SUPPR_TRANSIENT1_201	mlb[14A6]
DZ10	SUPPR_TRANSIENT1_201	mlb[14A6]
DZ11	SUPPR_TRANSIENT1_201	mlb[14A6]
DZ12	SUPPR_TRANSIENT1_201	mlb[24D7]
DZ13	SUPPR_TRANSIENT1_201	mlb[8B2]
DZ14	SUPPR_TRANSIENT1_201	mlb[8A2]
DZ15	SUPPR_TRANSIENT1_201	mlb[24D7]
DZ16	SUPPR_TRANSIENT1_201	mlb[8D8]
DZ17	SUPPR_TRANSIENT1_201	mlb[8D7]
DZ19	SUPPR_TRANSIENT1_201	mlb[12A4]
DZ20	SUPPR_TRANSIENT1_201	mlb[12C3]
DZ21	SUPPR_TRANSIENT1_201	mlb[12C4]
DZ22	SUPPR_TRANSIENT1_201	mlb[12B4]
DZ24	SUPPR_TRANSIENT1_201	mlb[7B2]
DZ25	SUPPR_TRANSIENT1_201	mlb[7B2]
DZ26	SUPPR_TRANSIENT1_201	mlb[7B7]
DZ27	SUPPR_TRANSIENT1_201	mlb[7B7]
DZ28	SUPPR_TRANSIENT1_201	mlb[9B5]
DZ29	SUPPR_TRANSIENT1_201	mlb[9B4]
DZ30	SUPPR_TRANSIENT1_201	mlb[9D3]
DZ31	ZENER_GDZ-0201	mlb[11A8]
DZ32	SUPPR_TRANSIENT1_201	mlb[24C8]
FL1	FILTER_2P_0201	mlb[2C2]
FL4	FILTER_2P_0402	mlb[14D3]
FL7	FIL_NUF2441FC_BGA	mlb[8C7]
FL8	FILTER_2P_0201	mlb[14A4]
FL9	FIL_NUF2441FC_BGA	mlb[8C7]
FL10	FILTER_2P_0201	mlb[10D4]

FL13	FILTER_2P_0201	mlb[14A4]
FL14	FILTER_2P_0201	mlb[14A4]
FL15	FILTER_2P_0201	mlb[14A4]
FL16	FILTER_2P_0201	mlb[10D4]
FL17	FILTER_2P_0402	mlb[14C5]
FL18	FILTER_2P_0201	mlb[14B7]
FL19	FILTER_2P_0201	mlb[14A7]
FL20	FILTER_2P_0201	mlb[14A7]
FL21	FILTER_2P_0201	mlb[14A7]
FL22	FILTER_2P_0201	mlb[14B5]
FL23	FILTER_2P_0201	mlb[14B5]
FL24	FILTER_2P_0402	mlb[14B4]
FL25	FILTER_2P_0201	mlb[13C7]
FL26	FILTER_2P_0402	mlb[9C5]
FL27	FILTER_2P_0402	mlb[9C5]
FL28	FILTER_2P_0201	mlb[9D4]
FL29	FILTER_2P_0201	mlb[9C4]
FL30	FILTER_2P_0201	mlb[2C7]
FL31	FILTER_2P_0201	mlb[2D7]
FL32	FILTER_2P_0201	mlb[2C2]
FL34	FILTER_2P_0201	mlb[7D7]
FL35	FILTER_2P_0201	mlb[7D3]
FL36	FILTER_2P_0201	mlb[7C3]
FL40	FILTER_2P_0402	mlb[14D3]
FL41	FILTER_2P_0402	mlb[14B3]
J1	CON_M34ST_D_TH_M-ST-TH	mlb[5A8]
J1_1	CON_F5RT_USB_S4MT_SM_F-RT-SM	usbbridge[32C2]mlb[22]
J1_2	CON_F5RT_USB_S4MT_SM_F-RT-SM	usbbridge[34C2]mlb[22]
J1_3	CON_F5RT_USB_S4MT_SM_F-RT-SM	usbbridge[33C2]mlb[22]
J1_4	CON_F5RT_USB_S4MT_SM_F-RT-SM	usbbridge[35C2]mlb[22]
J1_5	CON_F5RT_USB_S4MT_SM_F-RT-SM	usbbridge[36C2]mlb[27]
J2	CON_F30RT_S4MT_SM_F-RT-SM	mlb[14C1]
J3	CON_F9RT_D2MT_TH1_F-RT-TH	mlb[22B7]
J4	CON_M3ST_S_TH_M-ST-TH	mlb[20C4]
J5	CON_M34ST_D_TH_M-ST-TH	mlb[26D7]
J6	CON_M64ST_D_SM_M68_M-ST-SM	mlb[20B7]
J7	CON_M34ST_D_TH_M-ST-TH	mlb[26C7]
J8	CON_M20ST_D_TH1_M-ST-TH	mlb[25D4]
J9	CON_F38ST_D5MT_SM_F-ST-MICTOR-SM	mlb[25D7]
J11	CON_SIMCARD_8P_SM_SIMCARD-SKT-ST-SM	mlb[13D7]
J12	CON_M3ST_S_TH_M-ST-TH	mlb[20C4]
J14	CON_M20ST_D_TH2_M-ST-TH	mlb[16B3]
J15	CON_RJ11_4RT_D_TH_F-RT-TH	mlb[8A3]
J16	CON_M10ST_D_TH1_M-ST-TH	mlb[25C7]
J17	CON_M20ST_D_TH2_M-ST-TH	mlb[16A3]
J18	CON_F200RT_DDRDIMM_2MT_SM_F-RT-SM	mlb[29D7]
J19	CON_M20ST_D_TH2_M-ST-TH	mlb[17B4]
J20	CON_M20ST_D_TH2_M-ST-TH	mlb[17B2]
J22	CON_M2ST_100P_TH	mlb[20C2]
J23	CON_M2ST_100P_TH	mlb[20C2]
J24	CON_RJ45_SHORT_4MT_TH_F-RT-TH-RJ45	mlb[28D1]
J25	CON_F5RT_AUDJCK_SM2_F-RT-SM	mlb[10C2]
J26	CON_M2ST_100P_TH	mlb[20C2]
J27	CON_F9RT_D2MT_TH1_F-RT-TH	mlb[30B2]
J28	CON_M2ST_100P_TH	mlb[20C2]
J29	CON_M2ST_100P_TH	mlb[20B2]
J30	CON_M2ST_100P_TH	mlb[20B2]
J31	CON_M2ST_100P_TH	mlb[7D8]
J32	CON_F64ST_D_SM_F-ST-SM	mlb[20B4]
J33	CON_M20ST_D_TH1_M-ST-TH	mlb[25D1]
J34	CON_F2ST_COAX_S2MT_SM_F-ST-SM	mlb[24C7]
J35	CON_M2ST_100P_TH	mlb[16D8]
J36	CON_M3ST_S_TH_M-ST-TH	mlb[25A3]
J37	CON_M20ST_D_TH2_M-ST-TH	mlb[4D1]
J38	CON_M2ST_100P_TH	mlb[16C5]
J39	CON_M2ST_100P_TH	mlb[28A4]
J40	CON_M3ST_S_TH_M-ST-TH	mlb[25A3]
J41	CON_M2ST_100P_TH	mlb[29A3]
J47	CON_F2RT_S_TH1_F-RT-TH-RED	mlb[14A7]
J48	CON_F2RT_S_TH1_F-RT-TH-WHT	mlb[14A7]
J49	CON_F2RT_S_TH1_F-RT-TH-RED	mlb[14B6]
J50	CON_F2RT_S_TH1_F-RT-TH-WHT	mlb[14B6]
J56	CON_M2ST_100P_TH	mlb[22B6]
J57	CON_M20ST_D_TH2_M-ST-TH	mlb[22A7]
J58	CON_M2ST_100P_TH	mlb[22C6]
J59	CON_M3ST_S_TH_M-ST-TH	mlb[22D4]
J60	CON_M3ST_S_TH_M-ST-TH	mlb[22C4]
J61	CON_M2ST_100P_TH	mlb[22C4]
J62	CON_M2ST_100P_TH	mlb[22C4]
J63	CON_M3ST_S_TH_M-ST-TH	mlb[22B4]
J64	CON_M3ST_S_TH_M-ST-TH	mlb[22B4]
J65	CON_M3ST_S_TH_M-ST-TH	mlb[22A4]
J66	CON_M3ST_S_TH_M-ST-TH	mlb[22A4]
J67	CON_M2ST_100P_TH	mlb[22A4]
J68	CON_M2ST_100P_TH	mlb[22A4]
J73	CON_M3ST_S_TH_M-ST-TH	mlb[22D2]
J74	CON_M3ST_S_TH_M-ST-TH	mlb[22D2]
J77	CON_M2ST_100P_TH	mlb[22C2]
J78	CON_M2ST_100P_TH	mlb[22C2]
J81	CON_M34ST_D_TH_M-ST-TH	mlb[26D5]
J84	CON_M34ST_D_TH_M-ST-TH	mlb[26D2]
J87	CON_M20ST_D_TH1_M-ST-TH	mlb[25D3]
J90	CON_F1RT_S4MT_SM_F-RT-SM	mlb[24C8]
J92	CON_M2ST_S_TH_M-ST-TH	mlb[13D3]
J95	CON_M2ST_100P_TH	mlb[24D4]
J97	CON_M2ST_100P_TH	mlb[24C2]
J98	CON_M2ST_100P_TH	mlb[24C2]
J99	CON_1ST_BINDING_POST_ST-TH-RED	mlb[24C1]
J100	CON_1ST_BINDING_POST_ST-TH-BLK	mlb[24B1]
J101	CON_F3RT_S_TH1_F-RT-TH	mlb[24B1]
J102	CON_M2ST_S_TH_M-ST-TH	mlb[25B6]
J103	CON_M2ST_100P_TH	mlb[27B7]
J104	CON_M2ST_100P_TH	mlb[27B7]
J105	CON_M2ST_S_TH_M-ST-TH	mlb[8D7]
J107	CON_M20ST_D_TH2_M-ST-TH	mlb[12A6]
J108	CON_M3ST_S_TH_M-ST-TH	mlb[25D5]
J109	CON_M3ST_S_TH_M-ST-TH	mlb[25D5]
J112	CON_F5RT_USB_S4MT_SM_F-RT-SM	mlb[30B7]
J122	CON_M3ST_S_TH_M-ST-TH	mlb[25D2]
J123	CON_M3ST_S_TH_M-ST-TH	mlb[25D3]
J124	CON_M3ST_S_TH_M-ST-TH	mlb[25D1]
J125	CON_M3ST_S_TH_M-ST-TH	mlb[25D3]
J128	CON_F4RT_MINIDIN_3MT_TH_F-RT-TH	mlb[6B5]
J129	CON_M10ST_D_TH2_M-ST-TH	mlb[21B6]
J131	CON_M20ST_D_TH1_M-ST-TH	mlb[28B2]
J133	CON_M20ST_D_TH1_M-ST-TH	mlb[25B2]
J134	CON_M20ST_D_TH1_M-ST-TH	mlb[21D3]
J138	CON_M10ST_D_TH2_M-ST-TH	mlb[21B6]
J140	CON_M2ST_S_TH_M-ST-TH	mlb[25A5]
J141	CON_M20ST_D4MT_SM_M-ST-SM	mlb[16A6]
J143	CON_F5RT_AUDJCK_SM2_F-RT-SM	mlb[9C2]
J144	CON_M20ST_D_TH1_M-ST-TH	mlb[16C1]
J148	CON_M16ST_D_SMA_M-ST-SM	mlb[4B6]
J149	CON_M16ST_D_SMA_M-ST-SM	mlb[4A6]
J150	CON_M2ST_100P_TH	mlb[7D8]
J152	CON_M3ST_S_TH_M-ST-TH	mlb[7B1]
J153	CON_M2ST_100P_TH	mlb[7D2]
J156	CON_M3ST_S_TH_M-ST-TH	mlb[25B3]
J158	CON_M3ST_S_TH_M-ST-TH	mlb[7B7]
J159	CON_M2ST_100P_TH	mlb[8D6]
J160	CON_M2ST_100P_TH	mlb[8D4]
J161	CON_M2ST_100P_TH	mlb[8C4]
J184	CON_F1RT_S4MT_SM_F-RT-SM	mlb[12A1]
J190	CON_M3ST_S_TH_M-ST-TH	mlb[7A3]
J191	CON_M2ST_100P_TH	mlb[7D3]
J192	CON_M3ST_S_TH_M-ST-TH	mlb[8B1]
J193	CON_M3ST_S_TH_M-ST-TH	mlb[11A2]
J194	CON_M3ST_S_TH_M-ST-TH	mlb[11A2]
J196	CON_M30ST_D4MT_SM_M-ST-SM	mlb[16D2]
J197	CON_F1RT_S4MT_SM_F-RT-SM	mlb[7C7]
J198	CON_F1RT_S4MT_SM_F-RT-SM	mlb[7C7]
J199	CON_M3ST_S_TH_M-ST-TH	mlb[7D6]
J200	CON_M3ST_S_TH_M-ST-TH	mlb[7D4]
J201	CON_M2ST_100P_TH	mlb[7A5]
J202	CON_M3ST_S_TH_M-ST-TH	mlb[7D5]
J204	CON_M3ST_S_TH_M-ST-TH	mlb[7C1]
J206	CON_F2RT_S_TH1_F-RT-TH-RED	mlb[9D2]
J207	CON_F2RT_S_TH1_F-RT-TH-WHT	mlb[9C2]
J212	CON_M2ST_100P_TH	mlb[7B7]
J213	CON_M2ST_100P_TH	mlb[7B1]
J239	CON_M24ST_T_TH_M-ST-TH	mlb[12B7]
J240	CON_M24ST_T_TH_M-ST-TH	mlb[12C7]
J241	CON_M24ST_T_TH_M-ST-TH	mlb[12D7]
J246	CON_M3ST_S_TH_M-ST-TH	mlb[22C4]
J247	CON_M3ST_S_TH_M-ST-TH	mlb[22C4]
J254	CON_F6RT_D2MT_RCA_TH_F-RT-TH	mlb[6C6]
J256	CON_M24ST_T_TH_M-ST-TH	mlb[12B6]
J257	CON_M2ST_100P_TH	mlb[12B5]
J260	CON_M30ST_D4MT_SM_M-ST-SM	mlb[17A4]
J264	CON_F32RT_D_SM_F-RT-SM	mlb[17D1]
L8	IND_0603-HF	mlb[17A7]
L10	IND_VLS4012-SM	mlb[11D6]
L15	IND_VLS3012-SM-HF	mlb[11C4]
L16	IND_VLS3012-SM-HF	mlb[11C4]
L17	IND_VLS3012-SM-HF	mlb[11C4]
L18	IND_VLS3012-SM-HF	mlb[11A4]
L19	IND_LQH2MC-SM	mlb[13B2]
L23	FILTER_4P_TCM1005	mlb[14C4]
L29	FILTER_2P_0402	mlb[10C5]
L30	FILTER_2P_0402	mlb[10C5]
PD1	PHOTODIODE_25M_SM	mlb[23D3]
Q1	TRA_NCH_SCHOT_6P_WDFN	mlb[11A5 11A5]
Q1_1	TRA_DUAL_MOSFET_NCHN_3_SOT-963	usbbridge[32A4 32A5]mlb[22]
Q1_2	TRA_DUAL_MOSFET_NCHN_3_SOT-963	usbbridge[34A4 34A5]mlb[22]
Q1_3	TRA_DUAL_MOSFET_NCHN_3_SOT-963	usbbridge[33A4 33A5]mlb[22]
Q1_4	TRA_DUAL_MOSFET_NCHN_3_SOT-963	usbbridge[35A4 35A5]mlb[22]
Q1_5	TRA_DUAL_MOSFET_NCHN_3_SOT-963	usbbridge[36A4 36A5]mlb[27]
Q6	TRA_NCH_SCHOT_6P_WDFN	mlb[13C3 13D3]
Q9	TRA_SI8409DB_BGA	mlb[13A7]
Q10	TRA_NPCH_DMC2004LP1_DFN1612	mlb[24B4 24B3]
Q11	TRA_DUAL_MOSFET_NCHN_3_SOT-963	mlb[25A5 25A6]
Q12	TRA_DUAL_MOSFET_NCHN_3_SOT-963	mlb[15D7 15D3]
Q13	TRA_DUAL_MOSFET_NCHN_3_SOT-963	mlb[15D1 15D2]
Q14	TRA_DUAL_MOSFET_NCHN_3_SOT-963	mlb[15D5 15D6]
Q15	TRA_SINGLE_MOSFET_PC_HN_SOT-323	mlb[28B7]
Q16	TRA_SI8409DB_BGA	mlb[13A6]
Q17	TRA_SINGLE_MOSFET_PC_HN_SOT-323	mlb[28A7]
Q18	TRA_SINGLE_MOSFET_PC_HN_SOT-323	mlb[28C7]
Q19	TRA_MOSFET_NCHN_3P_S_OT883L	mlb[23C5]
Q20	TRA_DUAL_MOSFET_NCHN_3_SOT-963	mlb[15C7 15C6]
Q22	TRA_DUAL_MOSFET_NCHN_3_SOT-963	mlb[15C5 15C4]
Q23	TRA_DUAL_MOSFET_NCHN_3_SOT-963	mlb[25B6 25B7]
Q24	TRA_DUAL_MOSFET_NCHN_3_SOT-963	mlb[25B6 25B7]
Q25	TRA_DUAL_MOSFET_NCHN_3_SOT-963	mlb[25A7 25A8]
Q26	TRA_DUAL_MOSFET_NCHN_3_SOT-963	mlb[15A8 15A7]
Q27	TRA_DUAL_MOSFET_NCHN_3_SOT-963	mlb[15A6 15A4]
Q28	TRA_DUAL_MOSFET_NCHN_3_SOT-963	mlb[15C4 15C3]
Q29	TRA_DUAL_MOSFET_NCHN_3_SOT-963	mlb[15D4 15D8]
Q30	TRA_MOSFET_NCHN_3P_S_OT883L	mlb[13D6]
Q33	TRA_MOSFET_NCHN_3P_S_OT883L	mlb[21A5]
Q34	TRA_MOSFET_NCHN_3P_S_OT883L	mlb[21A5]
Q37	TRA_DUAL_MOSFET_NCHN_3_SOT-963	mlb[15A3 15A3]
Q38	TRA_DUAL_NPCH_NTUD3127C1_SOT-963	mlb[13A3 13B1]
R1	RES_201	mlb[29A4]
R1_1	RES_201	usbbridge[32A6]mlb[22]
R1_2	RES_201	usbbridge[34A6]mlb[22]
R1_3	RES_201	usbbridge[33A6]mlb[22]
R1_4	RES_201	usbbridge[35A6]mlb[22]
R1_5	RES_201	usbbridge[36A6]mlb[27]
R2	RES_201	mlb[28A5]
R2_1	RES_201	usbbridge[32A6]mlb[22]
R2_2	RES_201	usbbridge[34A6]mlb[22]
R2_3	RES_201	usbbridge[33A6]mlb[22]
R2_4	RES_201	usbbridge[35A6]mlb[22]
R2_5	RES_201	usbbridge[36A6]mlb[27]
R3	RES_201	mlb[28A5]
R3_1	RES_201	usbbridge[32B5]mlb[22]
R3_2	RES_201	usbbridge[34B5]mlb[22]
R3_3	RES_201	usbbridge[33B5]mlb[22]
R3_4	RES_201	usbbridge[35B5]mlb[22]
R3_5	RES_201	usbbridge[36B5]mlb[27]
R4_1	RES_201	usbbridge[32C5]mlb[22]
R4_2	RES_201	usbbridge[34C5]mlb[22]
R4_3	RES_201	usbbridge[33C5]mlb[22]
R4_4	RES_201	usbbridge[35C5]mlb[22]
R4_5	RES_201	usbbridge[36C5]mlb[27]
R5	RES_201	mlb[28A4]
R5_1	RES_201	usbbridge[32C5]mlb[22]
R5_2	RES_201	usbbridge[34C5]mlb[22]
R5_3	RES_201	usbbridge[33C5]mlb[22]
R5_4	RES_201	usbbridge[35C5]mlb[22]
R5_5	RES_201	usbbridge[36C5]mlb[27]
R6	RES_201	mlb[28D4]
R6_1	RES_201	usbbridge[32D5]mlb[22]
R6_2	RES_201	usbbridge[34D5]mlb[22]
R6_3	RES_201	usbbridge[33D5]mlb[22]
R6_4	RES_201	usbbridge[35D5]mlb[22]
R6_5	RES_201	usbbridge[36D5]mlb[27]
R7	RES_201	mlb[28D4]
R7_1	RES_201	usbbridge[32B3]mlb[22]
R7_2	RES_201	usbbridge[34B3]mlb[22]
R7_3	RES_201	usbbridge[33B3]mlb[22]
R7_4	RES_201	usbbridge[35B3]mlb[22]
R7_5	RES_201	usbbridge[36B3]mlb[27]
R8	RES_402-HF	mlb[2C2]
R8_1	RES_201	usbbridge[32C4]mlb[22]
R8_2	RES_201	usbbridge[34C4]mlb[22]
R8_3	RES_201	usbbridge[33C4]mlb[22]
R8_4	RES_201	usbbridge[35C4]mlb[22]
R8_5	RES_201	usbbridge[36C4]mlb[27]
R9	RES_201	mlb[28D4]
R9_1	RES_201	usbbridge[32B3]mlb[22]
R9_2	RES_201	usbbridge[34B3]mlb[22]
R9_3	RES_201	usbbridge[33B3]mlb[22]
R9_4	RES_201	usbbridge[35B3]mlb[22]
R9_5	RES_201	usbbridge[36B3]mlb[27]
R10	RES_201	mlb[28D4]
R11	RES_201	mlb[28B3]
R12	RES_201	mlb[28D4]
R13	RES_201	mlb[28C3]
R14	RES_201	mlb[28C3]
R15	RES_201	mlb[28D3]
R16	RES_402-HF	mlb[3D6]
R17	RES_402	mlb[3C2]
R18	RES_201	mlb[28A3]
R19	RES_201	mlb[28C2]
R20	RES_201	mlb[28C2]
R21	RES_201	mlb[28C2]
R22	RES_402	mlb[3D2]
R23	RES_201	mlb[28C2]
R24	RES_201	mlb[28C2]
R25	RES_201	mlb[28C2]
R26	RES_201	mlb[28C1]
R27	RES_201	mlb[2C2]
R28	RES_201	mlb[4C6]
R29	RES_402-HF	mlb[3D8]
R30	RES_201	mlb[28C1]
R31	RES_201	mlb[4D5]
R32	RES_201	mlb[2A7]
R33	RES_402-1	mlb[2A7]
R34	RES_201	mlb[5A6]
R35	RES_201	mlb[3B5]
R36	RES_201	mlb[3C4]
R37	RES_201	mlb[8A6]
R38	RES_201	mlb[13A6]
R39	RES_201	usbbridge[32B4]mlb[22]
R40	RES_201	mlb[2A6]
R41	RES_201	usbbridge[32C3]mlb[22]
R42	RES_201	mlb[2C7]
R43	RES_201	usbbridge[32C3]mlb[22]
R44	RES_201	mlb[2C6]
R45	RES_201	usbbridge[32A3]mlb[22]
R46	RES_201	usbbridge[32A3]mlb[22]
R47	RES_201	usbbridge[32A3]mlb[22]
R48	RES_201	usbbridge[33B4]mlb[22]
R49	RES_201	mlb[5C8]
R50	RES_201	usbbridge[33C3]mlb[22]
R51	RES_201	mlb[10D6]
R52	RES_201	mlb[10D6]
R53	RES_201	mlb[6C4]
R54	RES_201	mlb[4D6]
R55	RES_201	mlb[4D5]
R56	RES_201	usbbridge[33C3]mlb[22]
R57	RES_201	mlb[4D5]
R58	RES_201	usbbridge[33A3]mlb[22]
R59	RES_201	mlb[10C7]
R60	RES_201	usbbridge[33A3]mlb[22]
R61	RES_201	usbbridge[33A3]mlb[22]
R62	RES_201	mlb[10C7]
R63	RES_201	usbbridge[35B4]mlb[22]
R64	RES_201	usbbridge[35C3]mlb[22]
R65	RES_201	usbbridge[35C3]mlb[22]
R66	RES_201	usbbridge[35A3]mlb[22]
R67	RES_201	usbbridge[35A3]mlb[22]
R68	RES_201	usbbridge[35A3]mlb[22]
R69	RES_201	usbbridge[34B4]mlb[22]
R70	RES_201	usbbridge[34C3]mlb[22]
R71	RES_201	mlb[6D6]
R72	RES_201	mlb[6C6]
R73	RES_201	mlb[6C6]
R74	RES_201	mlb[6D4]
R75	RES_201	mlb[6C4]
R76	RES_201	mlb[6C4]
R77	RES_201	mlb[6C4]
R78	RES_201	mlb[6C4]
R79	RES_201	mlb[6C4]
R80	RES_201	usbbridge[34C3]mlb[22]
R81	RES_201	usbbridge[34A3]mlb[22]
R82	RES_201	usbbridge[34A3]mlb[22]
R83	RES_201	mlb[11A6]
R84	RES_201	mlb[23C5]
R85	RES_201	usbbridge[34A3]mlb[22]
R86	RES_201	usbbridge[36B4]mlb[27]
R87	RES_201	usbbridge[36C3]mlb[27]
R88	RES_201	usbbridge[36C3]mlb[27]
R89	RES_201	usbbridge[36A3]mlb[27]
R90	RES_201	usbbridge[36A3]mlb[27]
R91	RES_201	usbbridge[36A3]mlb[27]
R94	RES_402-1	mlb[2A7]
R95	RES_201	mlb[9B6]
R96	RES_201	mlb[11A6]
R97	RES_402	mlb[11A6]
R98	RES_201	mlb[14A4]
R99	RES_201	mlb[16C4]
R100	RES_201	mlb[28D4]
R101	RES_201	mlb[17A5]
R102	RES_201	mlb[17D5]
R103	RES_201	mlb[17D2]
R104	RES_402	mlb[3B5]
R105	RES_402	mlb[3A5]
R106	RES_402	mlb[3A5]
R107	RES_402	mlb[3A5]
R108	RES_402	mlb[3A5]
R109	RES_402	mlb[3A5]
R110	RES_201	mlb[20D6]
R111	RES_201	mlb[5B5]
R112	RES_201	mlb[16D8]
R113	RES_402	mlb[13B1]
R114	RES_402	mlb[16C3]
R115	RES_201	mlb[14C2]
R116	RES_201	mlb[22D8]
R117	RES_201	mlb[22D7]
R118	RES_201	mlb[22D7]
R119	RES_201	mlb[22D6]

R120	RES_201	mlb[22C6]
R121	RES_402	mlb[21D5]
R122	RES_201	mlb[20D4]
R124	RES_201	mlb[20C3]
R127	RES_201	mlb[29C2]
R129	RES_201	mlb[5B8]
R134	RES_201	mlb[10C3]
R136	RES_201	mlb[24C4]
R139	RES_201	mlb[24D4]
R141	RES_201	mlb[17B8]
R143	RES_201	mlb[17B8]
R149	RES_201	mlb[15B8]
R150	RES_201	mlb[10D6]
R153	RES_201	mlb[10C6]
R154	RES_201	mlb[10C6]
R155	RES_201	mlb[15B7]
R156	RES_201	mlb[15B7]
R157	RES_201	mlb[15B6]
R158	RES_201	mlb[15B5]
R159	RES_201	mlb[25B4]
R160	RES_201	mlb[25B4]
R161	RES_201	mlb[25B4]
R162	RES_201	mlb[25B3]
R163	RES_201	mlb[25B3]
R164	RES_201	mlb[25B3]
R165	RES_201	mlb[11C8]
R167	RES_201	mlb[25B3]
R168	RES_201	mlb[25B2]
R169	RES_201	mlb[25B2]
R170	RES_201	mlb[24B4]
R172	RES_201	mlb[13D8]
R173	RES_201	mlb[24B4]
R179	RES_201	mlb[25D5]
R181	RES_201	mlb[24D3]
R182	RES_201	mlb[25A8]
R183	RES_201	mlb[25A8]
R185	RES_201	mlb[25B7]
R186	RES_201	mlb[25A7]
R187	RES_201	mlb[25A6]
R188	RES_201	mlb[25B6]
R189	RES_201	mlb[25B6]
R190	RES_201	mlb[11A6]
R191	RES_201	mlb[25A6]
R193	RES_201	mlb[13C4]
R196	RES_201	mlb[17C3]
R197	RES_201	mlb[17C3]
R198	RES_201	mlb[29D8]
R199	RES_201	mlb[29D6]
R200	RES_201	mlb[29A5]
R201	RES_201	mlb[29A4]
R202	RES_201	mlb[29B4]
R203	RES_201	mlb[29D4]
R204	RES_201	mlb[29B4]
R205	RES_201	mlb[29B4]
R206	RES_201	mlb[29A4]
R207	RES_201	mlb[29B4]
R208	RES_201	mlb[29B3]
R209	RES_201	mlb[29C3]
R210	RES_201	mlb[29D3]
R211	RES_201	mlb[29D3]
R212	RES_201	mlb[29B3]
R213	RES_201	mlb[29C3]
R214	RES_201	mlb[29A3]
R215	RES_201	mlb[29A3]
R216	RES_201	mlb[29A2]
R218	RES_201	mlb[29A2]
R219	RES_201	mlb[29A2]
R220	RES_201	mlb[29C2]
R221	RES_201	mlb[29A1]
R222	RES_201	mlb[29C1]
R223	RES_201	mlb[29A1]
R225	RES_201	mlb[11A4]
R226	RES_201	mlb[29C1]
R227	RES_201	mlb[29B1]
R229	RES_201	mlb[29D1]
R230	RES_201	mlb[29D1]
R232	RES_201	mlb[11A8]
R241	RES_201	mlb[8A7]
R242	RES_201	mlb[8C8]
R243	RES_201	mlb[8D8]
R244	RES_201	mlb[8B7]
R245	RES_201	mlb[8B8]
R247	RES_201	mlb[8A8]
R250	RES_201	mlb[8C2]
R251	RES_201	mlb[8D2]
R258	RES_201	mlb[12C4]
R259	RES_201	mlb[12C3]
R260	RES_201	mlb[15D3]
R261	RES_201	mlb[15D7]
R269	RES_201	mlb[15D2]
R270	RES_201	mlb[15D1]
R272	RES_201	mlb[15D6]
R273	RES_201	mlb[15D5]
R274	RES_201	mlb[28A8]
R276	RES_201	mlb[28C7]
R277	RES_201	mlb[28C7]
R278	RES_201	mlb[28B7]
R279	RES_201	mlb[28B4]
R280	RES_201	mlb[28B3]
R281	RES_201	mlb[28B3]
R282	RES_201	mlb[30B7]
R284	RES_201	mlb[30B6]
R286	RES_201	mlb[30B6]
R287	RES_201	mlb[30B6]
R289	RES_201	mlb[30B5]
R290	RES_201	mlb[30B5]
R293	RES_201	mlb[30B3]
R294	RES_201	mlb[23C3]
R295	RES_201	mlb[23C3]
R296	RES_201	mlb[23C4]
R301	RES_201	mlb[23C3]
R302	RES_201	mlb[23D3]
R303	RES_201	mlb[23C2]
R304	RES_201	mlb[23D5]
R305	RES_201	mlb[23D5]
R306	RES_603	mlb[8B3]
R309	RES_201	mlb[11B8]
R310	RES_201	mlb[15D8]
R311	RES_201	mlb[13D6]
R313	RES_603	mlb[8B3]
R333	RES_201	mlb[10B3]
R340	RES_402-HF	mlb[6D5]
R345	RES_201	mlb[14B2]
R347	RES_603	mlb[12B5]

R349	RES_402	mlb[11A3]
R357	RES_201	mlb[15D4]
R360	RES_201	mlb[24D2]
R361	RES_201	mlb[24C2]
R362	RES_402	mlb[3D2]
R364	RES_201	mlb[9C6]
R365	RES_201	mlb[9C6]
R372	RES_201	mlb[29B1]
R376	RES_201	mlb[17A7]
R377	RES_201	mlb[17A6]
R378	RES_201	mlb[17A6]
R380	RES_201	mlb[17B6]
R383	RES_201	mlb[17C5]
R387	RES_201	mlb[15C7]
R388	RES_201	mlb[15C6]
R390	RES_201	mlb[15C5]
R392	RES_201	mlb[15C4]
R393	RES_201	mlb[15C4]
R394	RES_402	mlb[17C6]
R395	RES_201	mlb[29D5]
R396	RES_201	mlb[29B5]
R397	RES_201	mlb[29A5]
R398	RES_201	mlb[29D5]
R399	RES_201	mlb[29C5]
R400	RES_201	mlb[29C5]
R401	RES_201	mlb[29B4]
R402	RES_201	mlb[29B2]
R403	RES_201	mlb[29C2]
R404	RES_201	mlb[29B2]
R405	RES_201	mlb[29D2]
R406	RES_201	mlb[29D2]
R407	RES_201	mlb[29C2]
R408	RES_201	mlb[29B2]
R409	RES_201	mlb[30B7]
R410	RES_201	mlb[30B6]
R411	RES_201	mlb[15C3]
R417	RES_201	mlb[23D2]
R418	RES_201	mlb[16B5]
R419	RES_201	mlb[2B2]
R424	RES_201	mlb[2B2]
R427	RES_201	mlb[23A6]
R428	RES_201	mlb[8B6]
R430	RES_201	mlb[9D6]
R437	RES_201	mlb[7A7]
R438	RES_201	mlb[7A7]
R439	RES_201	mlb[9B7]
R440	RES_201	mlb[9D6]
R441	RES_201	mlb[9C6]
R442	RES_402	mlb[11C1]
R443	RES_402	mlb[11C1]
R444	RES_402	mlb[11C1]
R445	RES_402	mlb[11B1]
R446	RES_402	mlb[11B1]
R447	RES_402	mlb[11A1]
R449	RES_201	mlb[16C7]
R451	RES_402	mlb[16C3]
R452	RES_201	mlb[16C3]
R453	RES_201	mlb[16C2]
R454	RES_201	mlb[16B2]
R455	RES_201	mlb[16C2]
R456	RES_201	mlb[16B2]
R457	RES_201	mlb[16C2]
R458	RES_201	mlb[16B2]
R459	RES_201	mlb[16C2]
R460	RES_201	mlb[16B2]
R461	RES_402	mlb[25C4]
R462	RES_402	mlb[25C2]
R463	RES_402-HF	mlb[2C8]
R464	RES_201	mlb[2B8]
R465	RES_402-HF	mlb[2D7]
R466	RES_201	mlb[2B7]
R469	RES_402-HF	mlb[3D6]
R470	RES_805-LF	mlb[2A2]
R475	RES_201	mlb[17B5]
R476	RES_402-HF	mlb[2C2]
R478	RES_402	mlb[4C4]
R479	RES_201	mlb[4B4]
R480	RES_201	mlb[4B4]
R483	RES_402-HF	mlb[3D8]
R484	RES_402	mlb[5D8]
R485	RES_402	mlb[5D6]
R492	RES_201	mlb[6B5]
R493	RES_201	mlb[6B4]
R494	RES_201	mlb[5C8]
R495	RES_201	mlb[5C8]
R496	RES_201	mlb[7A8]
R497	RES_201	mlb[7A8]
R499	RES_201	mlb[7C7]
R500	RES_201	mlb[7B6]
R501	RES_201	mlb[7A4]
R502	RES_201	mlb[7A3]
R509	RES_201	mlb[9B8]
R510	RES_201	mlb[9B7]
R511	RES_201	mlb[9B4]
R512	RES_201	mlb[9B3]
R513	RES_201	mlb[9C3]
R514	RES_201	mlb[10B4]
R515	RES_201	mlb[11C8]
R516	RES_201	mlb[11A8]
R517	RES_201	mlb[11C8]
R518	RES_201	mlb[11A7]
R519	RES_201	mlb[11A5]
R522	RES_201	mlb[11A4]
R526	RES_402	mlb[11B1]
R527	RES_402	mlb[11A1]
R529	RES_201	mlb[12A4]
R530	RES_201	mlb[12B4]
R531	RES_201	mlb[12B3]
R532	RES_201	mlb[12A2]
R534	RES_201	mlb[13A7]
R535	RES_201	mlb[14B8]
R536	RES_201	mlb[14A8]
R537	RES_201	mlb[14A4]
R540	RES_201	mlb[21A5]
R541	RES_201	mlb[21A5]
R566	RES_402	mlb[21D8]
R567	RES_402	mlb[21D6]
R592	RES_402-HF	mlb[2D2]
R593	RES_402-HF	mlb[2D2]
R594	RES_201	mlb[7D7]
R596	RES_402	mlb[11C2]
R597	RES_201	mlb[7D2]
R598	RES_201	mlb[7D2]
R599	RES_201	mlb[7D2]

R600	RES_402-HF	mlb[16B4]
R601	RES_201	mlb[7A3]
R602	RES_201	mlb[7A3]
R603	RES_201	mlb[7C3]
R604	RES_201	mlb[7B3]
R605	RES_201	mlb[7C3]
R606	RES_201	mlb[7B3]
R607	RES_201	mlb[7C1]
R608	RES_201	mlb[7C1]
R619	RES_1206	mlb[7B6]
R620	RES_1206	mlb[7B6]
R621	RES_1206	mlb[7B6]
R622	RES_1206	mlb[7B6]
R623	RES_1206	mlb[7B1]
R624	RES_1206	mlb[7B1]
R625	RES_201	mlb[9D7]
R626	RES_201	mlb[9B6]
R627	RES_201	mlb[9A6]
R628	RES_201	mlb[9D6]
R629	RES_402	mlb[9B6]
R630	RES_402	mlb[9A6]
R631	RES_402	mlb[9B6]
R632	RES_402	mlb[9A6]
R633	RES_402	mlb[9B6]
R634	RES_402	mlb[9A6]
R635	RES_402	mlb[9B6]
R636	RES_402	mlb[9A6]
R637	RES_201	mlb[9A4]
R638	RES_201	mlb[9A4]
R639	RES_201	mlb[9A4]
R640	RES_201	mlb[9A4]
R641	RES_201	mlb[9B3]
R642	RES_201	mlb[9A2]
R643	RES_201	mlb[11B8]
R644	RES_201	mlb[14D7]
R645	RES_201	mlb[14C7]
R646	RES_402	mlb[14D7]
R647	RES_402	mlb[14C7]
R648	RES_402	mlb[14D7]
R649	RES_402	mlb[14C7]
R650	RES_402	mlb[14D7]
R651	RES_402	mlb[14C7]
R652	RES_402	mlb[14D6]
R653	RES_402	mlb[14C6]
R654	RES_402	mlb[14D6]
R655	RES_402	mlb[14C6]
R656	RES_201	mlb[20D3]
R657	RES_201	mlb[20D3]
R664	RES_201	mlb[4B2]
R667	RES_201	mlb[11C4]
R682	RES_201	mlb[2C2]
R683	RES_201	mlb[2C2]
R684	RES_201	mlb[11B8]
R685	RES_201	mlb[11B8]
R686	RES_201	mlb[11B8]
R687	RES_201	mlb[15B4]
R688	RES_201	mlb[15B3]
R693	RES_201	mlb[16A5]
R694	RES_201	mlb[16A5]
R695	RES_201	mlb[16A5]
R738	RES_201	mlb[7C7]
R739	RES_201	mlb[9B4]
R740	RES_201	mlb[9B4]
R741	RES_201	mlb[11C7]
R742	RES_402	mlb[11A3]
R743	RES_201	mlb[23A4]
R744	RES_201	mlb[23B3]
R745	RES_201	mlb[13A3]
R746	RES_402-HF	mlb[13B3]
R747	RES_201	mlb[13B3]
R748	RES_201	mlb[13B2]
R749	RES_201	mlb[13B2]
R750	RES_201	mlb[13B1]
R752	RES_201	mlb[16D4]
R753	RES_201	mlb[16D4]
R754	RES_201	mlb[16C4]
R755	RES_201	mlb[16D4]
R756	RES_201	mlb[16C4]
R757	RES_201	mlb[16D4]
R766	RES_402	mlb[7D8]
R767	RES_402	mlb[7C8]
R768	RES_402	mlb[7C8]
R769	RES_402	mlb[7C8]
R770	RES_402	mlb[7D8]
R771	RES_402	mlb[7C8]
R772	RES_402	mlb[7C8]
R773	RES_402	mlb[7C7]
R774	RES_402	mlb[7C7]
R775	RES_402	mlb[12B2]
R776	RES_201	mlb[12A2]
R777	RES_201	mlb[12A2]
R780	RES_201	mlb[17D3]
R781	RES_201	mlb[17D2]
R782	RES_201	mlb[17D2]
R785	RES_402	mlb[2A8]
R786	RES_402	mlb[2A8]
R6127	RES_201	mlb[21D4]
R6128	RES_201	mlb[21C3]
R6130	RES_201	mlb[21D4]
R6131	RES_201	mlb[21C4]
R6133	RES_201	mlb[21D4]
R6134	RES_201	mlb[21C4]
R6137	RES_201	mlb[21D3]
R6139	RES_201	mlb[21D3]
R6176	RES_402	mlb[21D4]
RP1	RPAK4P_4X0201-HF	mlb[2B8]
RP2	RPAK4P_4X0201-HF	mlb[5A6]
RP3	RPAK4P_4X0201-HF	mlb[5A6]
RP4	RPAK4P_4X0201-HF	mlb[5A4]
RP5	RPAK4P_4X0201-HF	mlb[5A4]
S1	SWI_TACT_4P1_SM	mlb[16C8]
S1_1	SWI_TACT_4P1_SM	usbbridge[32B3]mlb[22]
S1_2	SWI_TACT_4P1_SM	usbbridge[34B3]mlb[22]
S1_3	SWI_TACT_4P1_SM	usbbridge[33B3]mlb[22]
S1_4	SWI_TACT_4P1_SM	usbbridge[35B3]mlb[22]
S1_5	SWI_TACT_4P1_SM	usbbridge[36B3]mlb[27]
S2	SWI_TACT_4P1_SM	mlb[28A6]
S3	SWI_TACT_4P1_SM	mlb[25A4]
S4	SWI_TACT_4P1_SM	mlb[25C3]
S5	SWI_TACT_4P1_SM	mlb[24D6]
S6	SWI_TACT_4P1_SM	mlb[24C5]
S7	SWI_TACT_4P1_SM	mlb[25C5]
S8	SWI_8PAK_SM-LF	mlb[27C6]

S9	SWI_TACT_4P1_SM	mlb[12B4]
S10	SWI_TACT_4P1_SM	mlb[12A4]
S11	SWI_TACT_4P1_SM	mlb[12C5]
S12	SWI_TACT_4P1_SM	mlb[12C4]
S13	SWI_SLIDE_2P_2MT_SM	mlb[12B4]
S15	SWI_TACT_4P1_SM	mlb[25C1]
S16	SWI_TACT_4P1_SM	mlb[24C7]
S17	SWI_TACT_4P1_SM	mlb[28A2]
S19	SWI_8PAK_SM-LF	mlb[5A6]
S20	SWI_8PAK_SM-LF	mlb[5A5]
S21	SWI_8PAK_SM-LF	mlb[16D3]
S28	SWI_TACT_4P1_SM	mlb[17B5]
SW1	SWI_ROTARY_RTAP_DP_T H	mlb[9B5]
SW2	SWI_ROTARY_RTAP_DP_T H	mlb[9A5]
SW3	SWI_ROTARY_RTAP_DP_T H	mlb[14D5]
SW4	SWI_ROTARY_RTAP_DP_T H	mlb[14C5]
T1	XFR_100BT_MDIX_XFMR	mlb[28D3]
TP1	TP_SM-TP25-TOP	mlb[3C8]
TP2	TP_SM-TP25-TOP	mlb[3B8]
TP3	TP_TP-5016-SM	mlb[31D6]
TP4	TP_SM-TP25-TOP	mlb[3B5]
TP5	TP_TP-5016-SM	mlb[10B2]
TP6	TP_SM-TP25-TOP	mlb[3B5]
TP7	TP_SM-TP25-TOP	mlb[3B5]
TP8	TP_TP-5016-SM	mlb[31D6]
TP9	TP_TP-5016-SM	mlb[31D6]
TP10	TP_SM-TP25-TOP	mlb[3B5]
TP11	TP_TP-5016-SM	mlb[31D8]
TP12	TP_TP-5016-SM	mlb[31D8]
TP13	TP_TP-P6	mlb[29B8]
TP14	TP_TP-P6	mlb[29B8]
TP15	TP_TP-P6	mlb[29D8]
TP16	TP_TP-P6	mlb[29A8]
TP17	TP_TP-P6	mlb[29A8]
TP18	TP_TP-P6	mlb[29D8]
TP19	TP_TP-P6	mlb[29D8]
TP20	TP_TP-P6	mlb[29D8]
TP21	TP_TP-P6	mlb[29C8]
TP22	TP_TP-P6	mlb[29C8]
TP23	TP_TP-P6	mlb[29B8]
TP24	TP_TP-P6	mlb[29D8]
TP25	TP_TP-P6	mlb[29C8]
TP26	TP_TP-P6	mlb[29C8]
TP27	TP_TP-P6	mlb[29B8]
TP28	TP_TP-P6	mlb[29B8]
TP29	TP_TP-P6	mlb[29B8]
TP30	TP_TP-P6	mlb[29A8]
TP31	TP_TP-P6	mlb[29D8]
TP32	TP_TP-P6	mlb[29B8]
TP33	TP_TP-P6	mlb[29D8]
TP34	TP_TP-P6	mlb[29C8]
TP35	TP_TP-P6	mlb[29D8]
TP36	TP_TP-P6	mlb[29C8]
TP37	TP_TP-P6	mlb[29D8]
TP38	TP_TP-P6	mlb[29B8]
TP39	TP_TP-P6	mlb[29B8]
TP40	TP_TP-P6	mlb[29B8]
TP41	TP_TP-P6	mlb[29D8]
TP42	TP_TP-P6	mlb[29A8]
TP43	TP_TP-P6	mlb[29D8]
TP44	TP_TP-P6	mlb[29B8]
TP45	TP_TP-P6	mlb[29C8]
TP46	TP_TP-P6	mlb[29C8]
TP47	TP_TP-P6	mlb[29C8]
TP48	TP_TP-P6	mlb[29B8]
TP49	TP_TP-P6	mlb[29D8]
TP50	TP_TP-P6	mlb[29D8]
TP51	TP_TP-P6	mlb[29D8]
TP52	TP_TP-P6	mlb[29B8]
TP53	TP_TP-P6	mlb[29C8]
TP54	TP_TP-P6	mlb[29B8]
TP55	TP_TP-P6	mlb[29D8]
TP56	TP_TP-P6	mlb[29B8]
TP57	TP_TP-P6	mlb[29D6]
TP58	TP_TP-P6	mlb[29B6]
TP59	TP_TP-P6	mlb[29B6]
TP60	TP_TP-P6	mlb[29B6]
TP61	TP_TP-P6	mlb[29D6]
TP62	TP_TP-P6	mlb[29D6]
TP63	TP_TP-P6	mlb[29A6]
TP64	TP_TP-P6	mlb[29D6]
TP65	TP_TP-P6	mlb[29D6]
TP66	TP_TP-P6	mlb[29C6]
TP67	TP_TP-P6	mlb[29B6]
TP68	TP_TP-P6	mlb[29B6]
TP69	TP_TP-P6	mlb[29D6]
TP70	TP_TP-P6	mlb[29C6]
TP71	TP_TP-P6	mlb[29A6]
TP72	TP_TP-P6	mlb[29C6]
TP73	TP_TP-P6	mlb[29C6]
TP74	TP_TP-P6	mlb[29C6]
TP75	TP_TP-P6	mlb[29C6]
TP76	TP_TP-P6	mlb[29B6]
TP77	TP_TP-P6	mlb[29B6]
TP78	TP_TP-P6	mlb[29C6]
TP79	TP_TP-P6	mlb[29D6]
TP80	TP_TP-P6	mlb[29C6]
TP81	TP_TP-P6	mlb[29B6]
TP82	TP_TP-P6	mlb[29B6]
TP83	TP_TP-P6	mlb[29B6]
TP85	TP_TP-P6	mlb[29B6]
TP86	TP_TP-P6	mlb[29A6]
TP87	TP_TP-P6	mlb[29D6]
TP88	TP_TP-P6	mlb[29D6]
TP89	TP_TP-P6	mlb[29C6]
TP90	TP_TP-P6	mlb[29B5]
TP91	TP_TP-P6	mlb[29C5]
TP92	TP_TP-P6	mlb[29B5]
TP93	TP_TP-P6	mlb[29B5]
TP94	TP_TP-P6	mlb[29B5]
TP95	TP_TP-P6	mlb[29B5]
TP96	TP_TP-P6	mlb[29A5]
TP97	TP_TP-P6	mlb[29C5]
TP98	TP_TP-P6	mlb[29D5]
TP99	TP_TP-P6	mlb[29C5]
TP100	TP_TP-P6	mlb[29D5]
TP101	TP_TP-P6	mlb[29D5]
TP102	TP_TP-P6	mlb[29B5]
TP103	TP_TP-P6	mlb[29B5]

TP104	TP_TP-P6	mlb[29C5]
TP105	TP_TP-5016-SM	mlb[31D7]
TP106	TP_TP-5016-SM	mlb[31D7]
TP107	TP_TP-5016-SM	mlb[31D7]
TP108	TP_TP-P6	mlb[30B6]
TP109	TP_SM-TP25-TOP	mlb[3B3]
TP110	TP_SM-TP25-TOP	mlb[3B3]
TP111	TP_SM-TP25-TOP	mlb[3B3]
TP112	TP_SM-TP25-TOP	mlb[3B3]
TP113	TP_SM-TP25-TOP	mlb[3B3]
TP114	TP_SM-TP25-TOP	mlb[3B3]
TP115	TP_TP-5016-SM	mlb[31C5]
TP116	TP_SM-TP25-TOP	mlb[3B3]
TP117	TP_SM-TP25-TOP	mlb[3B3]
TP118	TP_SM-TP25-TOP	mlb[3B3]
TP119	TP_TP-5016-SM	mlb[27C7]
TP120	TP_SM-TP25-TOP	mlb[3B3]
TP121	TP_SM-TP25-TOP	mlb[3B3]
TP122	TP_SM-TP25-TOP	mlb[3B3]
TP123	TP_SM-TP25-TOP	mlb[3B3]
TP124	TP_SM-TP25-TOP	mlb[3B3]
TP125	TP_SM-TP25-TOP	mlb[3B3]
TP126	TP_SM-TP25-TOP	mlb[3B3]
TP127	TP_SM-TP25-TOP	mlb[3B3]
TP128	TP_SM-TP25-TOP	mlb[3B3]
TP129	TP_SM-TP25-TOP	mlb[3A3]
TP130	TP_SM-TP25-TOP	mlb[3A3]
TP131	TP_SM-TP25-TOP	mlb[3A3]
TP132	TP_TP-P6	usbbridge[32C6]mlb[22]
TP133	TP_TP-P6	usbbridge[32B6]mlb[22]
TP134	TP_TP-P6	usbbridge[32B6]mlb[22]
TP135	TP_TP-P6	usbbridge[32B6]mlb[22]
TP136	TP_TP-P6	usbbridge[32B6]mlb[22]
TP137	TP_TP-P6	usbbridge[32B6]mlb[22]
TP138	TP_TP-5016-SM	mlb[31D5]
TP139	TP_TP-5016-SM	mlb[31D5]
TP140	TP_TP-P6	usbbridge[32B6]mlb[22]
TP141	TP_TP-P6	usbbridge[32B6]mlb[22]
TP142	TP_TP-P6	usbbridge[33C6]mlb[22]
TP143	TP_TP-P6	usbbridge[33B6]mlb[22]
TP144	TP_TP-P6	usbbridge[33B6]mlb[22]
TP145	TP_TP-P6	usbbridge[33B6]mlb[22]
TP146	TP_TP-P6	usbbridge[33B6]mlb[22]
TP147	TP_TP-P6	usbbridge[33B6]mlb[22]
TP148	TP_TP-P6	usbbridge[33B6]mlb[22]
TP149	TP_TP-P6	usbbridge[33B6]mlb[22]
TP150	TP_TP-P6	usbbridge[35C6]mlb[22]
TP151	TP_TP-5016-SM	mlb[31C7]
TP152	TP_TP-5016-SM	mlb[31C7]
TP153	TP_TP-5016-SM	mlb[31C7]
TP154	TP_TP-5016-SM	mlb[31C7]
TP155	TP_TP-P6	usbbridge[35B6]mlb[22]
TP156	TP_TP-5016-SM	mlb[31C6]
TP157	TP_TP-5016-SM	mlb[31C6]
TP158	TP_TP-5016-SM	mlb[31C6]
TP159	TP_TP-5016-SM	mlb[31C6]
TP160	TP_TP-5016-SM	mlb[31C6]
TP161	TP_TP-P6	usbbridge[35B6]mlb[22]
TP162	TP_TP-P6	usbbridge[35B6]mlb[22]
TP163	TP_TP-P6	usbbridge[35B6]mlb[22]
TP164	TP_TP-P6	usbbridge[35B6]mlb[22]
TP165	TP_TP-P6	usbbridge[35B6]mlb[22]
TP166	TP_TP-P6	usbbridge[35B6]mlb[22]
TP167	TP_TP-P6	usbbridge[34C6]mlb[22]
TP168	TP_TP-P6	usbbridge[34B6]mlb[22]
TP169	TP_TP-P6	usbbridge[34B6]mlb[22]
TP170	TP_TP-P6	usbbridge[34B6]mlb[22]
TP171	TP_TP-P6	usbbridge[34B6]mlb[22]
TP172	TP_TP-P6	usbbridge[34B6]mlb[22]
TP173	TP_TP-P6	usbbridge[34B6]mlb[22]
TP174	TP_TP-P6	usbbridge[34B6]mlb[22]
TP175	TP_TP-P6	usbbridge[36C6]mlb[27]
TP176	TP_TP-P6	usbbridge[36B6]mlb[27]
TP177	TP_TP-P6	usbbridge[36B6]mlb[27]
TP178	TP_TP-P6	usbbridge[36B6]mlb[27]
TP179	TP_TP-P6	usbbridge[36B6]mlb[27]
TP180	TP_TP-P6	usbbridge[36B6]mlb[27]
TP181	TP_TP-P6	usbbridge[36B6]mlb[27]
TP182	TP_TP-P6	usbbridge[36B6]mlb[27]
TP193	TP_SM-TP25-TOP	mlb[2C2]
TP194	TP_SM-TP25-TOP	mlb[2C2]
TP195	TP_SM-TP25-TOP	mlb[3C5]
TP196	TP_SM-TP25-TOP	mlb[4D6]
TP198	TP_SM-TP25-TOP	mlb[17C2]
TP199	TP_SM-TP25-TOP	mlb[17C2]
TP200	TP_TP-P6	mlb[29C8]
TP201	TP_TP-P6	mlb[29B8]
TP202	TP_TP-P6	mlb[29C8]
TP229	TP_SM-TP25-TOP	mlb[16C5]
TP230	TP_SM-TP25-TOP	mlb[16B2]
TP231	TP_SM-TP25-TOP	mlb[16B2]
TP232	TP_SM-TP25-TOP	mlb[16B2]
TP233	TP_SM-TP25-TOP	mlb[16B2]
TP234	TP_SM-TP25-TOP	mlb[16B2]
TP235	TP_SM-TP25-TOP	mlb[16B2]
TP236	TP_SM-TP25-TOP	mlb[16B2]
TP237	TP_SM-TP25-TOP	mlb[16B2]
TP238	TP_SM-TP25-TOP	mlb[16B2]
TP239	TP_SM-TP25-TOP	mlb[16B2]
TP240	TP_SM-TP25-TOP	mlb[16B2]
TP241	TP_SM-TP25-TOP	mlb[16B2]
TP242	TP_SM-TP25-TOP	mlb[16B1]
TP243	TP_SM-TP25-TOP	mlb[16B1]
TP244	TP_SM-TP25-TOP	mlb[16B1]
TP245	TP_SM-TP25-TOP	mlb[16B1]
TP246	TP_SM-TP25-TOP	mlb[16B1]
TP247	TP_SM-TP25-TOP	mlb[16B1]
TP248	TP_SM-TP25-TOP	mlb[16B1]
TP249	TP_SM-TP25-TOP	mlb[16B1]
TP250	TP_SM-TP25-TOP	mlb[16B1]
TP251	TP_SM-TP25-TOP	mlb[16B1]
TP252	TP_SM-TP25-TOP	mlb[16B1]
TP253	TP_SM-TP25-TOP	mlb[16B1]
TP254	TP_SM-TP25-TOP	mlb[16B1]
TP255	TP_SM-TP25-TOP	mlb[17B2]
TP256	TP_SM-TP25-TOP	mlb[17B2]
TP257	TP_SM-TP25-TOP	mlb[17B2]
TP258	TP_SM-TP25-TOP	mlb[17B2]
TP259	TP_SM-TP25-TOP	mlb[17A2]
TP260	TP_SM-TP25-TOP	mlb[17A2]
TP261	TP_SM-TP25-TOP	mlb[17A2]
TP262	TP_SM-TP25-TOP	mlb[17A2]
TP263	TP_SM-TP25-TOP	mlb[17A2]
TP264	TP_SM-TP25-TOP	mlb[17A2]
TP265	TP_SM-TP25-TOP	mlb[17A2]
TP266	TP_SM-TP25-TOP	mlb[17A2]
TP267	TP_SM-TP25-TOP	mlb[17B1]
TP268	TP_SM-TP25-TOP	mlb[17B1]
TP269	TP_SM-TP25-TOP	mlb[17B1]
TP270	TP_SM-TP25-TOP	mlb[17B1]
TP271	TP_SM-TP25-TOP	mlb[17B1]
TP272	TP_SM-TP25-TOP	mlb[17A1]
TP273	TP_SM-TP25-TOP	mlb[17A1]
TP274	TP_SM-TP25-TOP	mlb[17A1]
TP275	TP_SM-TP25-TOP	mlb[17A1]
TP276	TP_SM-TP25-TOP	mlb[17A1]
TP277	TP_SM-TP25-TOP	mlb[17A1]
TP278	TP_SM-TP25-TOP	mlb[17A1]
TP279	TP_SM-TP25-TOP	mlb[17A1]
U1	74LVC1G08GF_SOT891	mlb[2C8]
U1_1	MAX8512_SC70-5	usbbridge[32C5]mlb[22]
U1_2	MAX8512_SC70-5	usbbridge[34C5]mlb[22]
U1_3	MAX8512_SC70-5	usbbridge[33C5]mlb[22]
U1_4	MAX8512_SC70-5	usbbridge[35C5]mlb[22]
U1_5	MAX8512_SC70-5	usbbridge[36C5]mlb[27]
U2	74AUP1T97_SOT891	mlb[2C7]
U2_1	FT232RL_SSOP	usbbridge[32C4]mlb[22]
U2_2	FT232RL_SSOP	usbbridge[34C4]mlb[22]
U2_3	FT232RL_SSOP	usbbridge[33C4]mlb[22]
U2_4	FT232RL_SSOP	usbbridge[35C4]mlb[22]
U2_5	FT232RL_SSOP	usbbridge[36C4]mlb[27]
U3	MAX3232_SO-LF	mlb[22C7]
U4	74LVC1G08GF_SOT891	mlb[11A7]
U5	MAX8860_UMAX	mlb[29A5]
U6	SN74LVC2T45_WCSP	mlb[29C4]
U7	74AUP1T97_SOT891	mlb[23C7]
U8	LIS331DL_LGA	mlb[13C6]
U9	SN74LVC2T45_WCSP	mlb[29D4]
U12	LAN91C111_TQFP	mlb[28D5]
U14	MAX8860_UMAX	mlb[28A4]
U15	MAX3232_SO-LF	mlb[30B4]
U19	OPAMP_MAX4231_UDFN-H F	mlb[23D3]
U23	ISL59121_WLCSP9	mlb[6D4]
U27	SUPPR_NUP412VP5_SOT953	mlb[14A3]
U28	MAX8512_SC70-5	mlb[22D8]
U29	74LVC2G34_SOT891	mlb[22C6 22D6]
U30	BCM5974_BGA57_UFBGA	mlb[17D7]
U32	MAX8512_SC70-5	mlb[25B3]
U33	SN74LVC2T45_WCSP	mlb[29B4]
U34	SN74LVC2T45_WCSP	mlb[29B4]
U37	SN74LVC2T45_WCSP	mlb[29B2]
U38	SN74LVC2T45_WCSP	mlb[29C2]
U39	SN74LVC2T45_WCSP	mlb[29B2]
U40	SN74LVC2T45_WCSP	mlb[29D2]
U41	WM1817_BGA	mlb[8C5]
U47	LT3460_SC70	mlb[17A7]
U48	D1755AA_UFNBA	mlb[11D6]
U49	74LVC2G34_SOT891	mlb[15A5 15B5]
U52	SC58720X02_FBGA	mlb[2C6]
U52	SC58720X02_FBGA	mlb[3B4 3D3 3D6]
U52	SC58720X02_FBGA	mlb[4D8]
U52	SC58720X02_FBGA	mlb[5C6]
U53	74LVC2G04_SOT891	mlb[12A4 12A3]
U54	74LVC2G04_SOT891	mlb[16B5]
U55	74LVC1G08GF_SOT891	mlb[11A7]
U56	SN74LVC1G14_SOT553-5	mlb[25C3]
U57	74LVC1G157_SOT891	mlb[25C2]
U58	FLASH_AT25DF081_DFN	mlb[4B4]
U59	ISL29003_ODFN	mlb[23A7]
U60	CS42L61_WLCSP66	mlb[7C5]
U61	74LVC2G04_SOT891	mlb[10B4]
U64	NIMBUS1_BGA	mlb[16D6]
U65	MARIO_LITE_BGA	mlb[17D4]
U67	SN74LVC1G14_SOT553-5	mlb[21D7]
U68	74LVC1G157_SOT891	mlb[21D6]
U70	CD3272_WCSP9	mlb[9A3]
U71	74AUP2G125_SOT833	mlb[20D7]
U72	74AUP2G126_SOT833	mlb[20D7]
U73	74AUP2G125_SOT833	mlb[20D5]
U74	74AUP2G126_SOT833	mlb[20D5]
U75	74LVC1G157_SOT891	mlb[20C3]
U76	74LVC1G157_SOT891	mlb[20D3]
U83	ISL29015S2378_ODFN	mlb[23B3]
U84	FLASH_4GX8_48P4_TSOP	mlb[4B8]
U85	DCDC_LM2705_USMD	mlb[13B2]
VR2	VREG_MIC29502_TO-263	mlb[24D3]
XW1	SHORT_SM	mlb[2C2]
XW2	SHORT_SM	mlb[2C1]
XW3	SHORT_SM	mlb[3D5]
XW4	SHORT_SM	mlb[3C2]
XW5	SHORT_SM	mlb[3C2]
XW6	SHORT_SM	mlb[3D5]
XW7	SHORT_SM	mlb[3C1]
XW8	SHORT_SM	mlb[3C1]
XW9	SHORT_SM	mlb[3D8]
XW10	SHORT_SM	mlb[3D8]
XW11	SHORT_SM	mlb[2B7]
XW12	SHORT_SM	mlb[17A8]
XW13	SHORT_SM	mlb[17A8]
XW14	SHORT_SM	mlb[17A5]
XW15	SHORT_SM	mlb[4C4]
XW16	SHORT_SM	mlb[4C4]
XW17	SHORT_SM	mlb[17D5]
XW18	SHORT_SM	mlb[17A5]
XW19	SHORT_SM	mlb[17D5]
XW20	SHORT_SM	mlb[17D3]
XW21	SHORT_SM	mlb[17D2]
XW47	SHORT_SM	mlb[6D6]
XW48	SHORT_SM	mlb[6D5]
XW55	SHORT_SM	mlb[11A4]
XW60	SHORT_SM	mlb[11A3]
XW67	SHORT_SM	mlb[20B8]
XW68	SHORT_SM	mlb[20B8]
XW101	SHORT_SM	mlb[26D2]
XW102	SHORT_SM	mlb[26D2]
XW103	SHORT_SM	mlb[26D2]
XW104	SHORT_SM	mlb[26D2]
XW105	SHORT_SM	mlb[26D2]
XW106	SHORT_SM	mlb[26D2]
XW109	SHORT_SM	mlb[26D2]
XW111	SHORT_SM	mlb[26D2]
XW118	SHORT_SM	mlb[14B5]
XW119	SHORT_SM	mlb[3D1]
XW120	SHORT_SM	mlb[3D2]
XW123	SHORT_SM	mlb[2C8]
XW124	SHORT_SM	mlb[2C8]
XW125	SHORT_SM	mlb[2D8]
XW126	SHORT_SM	mlb[2D8]
XW127	SHORT_SM	mlb[2C2]
XW128	SHORT_SM	mlb[2D1]
XW129	SHORT_SM	mlb[3D5]
XW130	SHORT_SM	mlb[3D5]
XW133	SHORT_SM	mlb[2A1]
XW134	SHORT_SM	mlb[2A2]
XW139	SHORT_SM	mlb[3D8]
XW140	SHORT_SM	mlb[5D8]
XW141	SHORT_SM	mlb[3D8]
XW142	SHORT_SM	mlb[5D7]
XW143	SHORT_SM	mlb[5D6]
XW144	SHORT_SM	mlb[5D6]
XW146	SHORT_SM	mlb[9C2]
XW147	SHORT_SM	mlb[11A5]
XW148	SHORT_SM	mlb[11A5]
XW149	SHORT_SM	mlb[14B4]
XW150	SHORT_SM	mlb[20A7]
XW151	SHORT_SM	mlb[24D2]
XW152	SHORT_SM	mlb[2D2]
XW153	SHORT_SM	mlb[2D2]
XW154	SHORT_SM	mlb[2D1]
XW155	SHORT_SM	mlb[2D1]
XW156	SHORT_SM	mlb[7D7]
XW157	SHORT_SM	mlb[7D7]
XW158	SHORT_SM	mlb[10C3]
XW159	SHORT_SM	mlb[11A6]
XW162	SHORT_SM	mlb[11C3]
XW163	SHORT_SM	mlb[11C2]
XW165	SHORT_SM	mlb[7D2]
XW166	SHORT_SM	mlb[7D2]
XW167	SHORT_SM	mlb[7D1]
XW168	SHORT_SM	mlb[7D1]
XW169	SHORT_SM	mlb[7D1]
XW170	SHORT_SM	mlb[7C2]
XW171	SHORT_SM	mlb[16C4]
XW172	SHORT_SM	mlb[16C4]
XW173	SHORT_SM	mlb[2A2]
XW174	SHORT_SM	mlb[11C5]
XW175	SHORT_SM	mlb[11C5]
XW176	SHORT_SM	mlb[9B3]
XW177	SHORT_SM	mlb[9B3]
XW178	SHORT_SM	mlb[23B3]
XW179	SHORT_SM	mlb[23B3]
XW180	SHORT_SM	mlb[13B3]
XW181	SHORT_SM	mlb[13B3]
XW182	SHORT_SM	mlb[14B5]
XW183	SHORT_SM	mlb[14B5]
XW184	SHORT_SM	mlb[5A7]
XW185	SHORT_SM	mlb[11A4]
Y1	CRYSTAL_3.2X1.5X.6-SM	mlb[11D6]
Y1_1	CRYSTAL_4PIN_SM-3.2X2.5MM	usbbridge[32B4]mlb[22]
Y1_2	CRYSTAL_4PIN_SM-3.2X2.5MM	usbbridge[34B4]mlb[22]
Y1_3	CRYSTAL_4PIN_SM-3.2X2.5MM	usbbridge[33B4]mlb[22]
Y1_4	CRYSTAL_4PIN_SM-3.2X2.5MM	usbbridge[35B4]mlb[22]
Y1_5	CRYSTAL_4PIN_SM-3.2X2.5MM	usbbridge[36B4]mlb[27]
Y2	CRYSTAL_4PIN_SM-2	mlb[2A6]
Y4	CRYSTAL_SM	mlb[28A4]
ZT1	MTGHOLE	mlb[24C1]
ZT4	MTGHOLE	mlb[24D1]
ZT5	MTGHOLE	mlb[24D1]
ZT6	MTGHOLE	mlb[24C1]

S8	SWI_8PAK_SM-LF	mlb[22C6]
S9	SWI_TACT_4P1_SM	mlb[11A8]
S10	SWI_TACT_4P1_SM	mlb[11A7]
S11	SWI_TACT_4P1_SM	mlb[11A5]
S12	SWI_TACT_4P1_SM	mlb[11A5]
S13	SWI_SLIDE_2P_2MT_SM	mlb[11A3]
S14	SWI_8PAK_SM-LF	mlb[26C4]
S15	SWI_TACT_4P1_SM	mlb[18B4]
S16	SWI_8PAK_SM-LF	mlb[18B3]
S17	SWI_TACT_4P1_SM	mlb[18C2]
S18	SWI_TACT_4P1_SM	mlb[18B2]
S26	SWI_8PAK_SM-LF	mlb[16D3]
S27	SWI_LM34902_USMD	mlb[13D7]
S28	SWI_TACT_4P1_SM	mlb[15B4]
T1	XFR_100BT_MDIX_XFMR	mlb[23D3]
TP1	TP_TP-5016-SM	mlb[2D8]
TP2	TP_TP-5016-SM	mlb[2D8]
TP3	TP_TP-5016-SM	mlb[6A8]
TP4	TP_TP-5016-SM	mlb[6A8]
TP5	TP_TP-5016-SM	mlb[7D7]
TP6	TP_TP-5016-SM	mlb[7D7]
TP7	TP_TP-5016-SM	mlb[7D7]
TP8	TP_TP-5016-SM	mlb[10A4]
TP9	TP_TP-5016-SM	mlb[10A4]
TP10	TP_TP-5016-SM	mlb[12B2]
TP11	TP_TP-5016-SM	mlb[19B1]
TP12	TP_TP-5016-SM	mlb[19B1]
TP13	TP_TP-P6	mlb[24B8]
TP14	TP_TP-P6	mlb[24B8]
TP15	TP_TP-P6	mlb[24D8]
TP16	TP_TP-P6	mlb[24A8]
TP17	TP_TP-P6	mlb[24A8]
TP18	TP_TP-P6	mlb[24D8]
TP19	TP_TP-P6	mlb[24D8]
TP20	TP_TP-P6	mlb[24D8]
TP21	TP_TP-P6	mlb[24C8]
TP22	TP_TP-P6	mlb[24C8]
TP23	TP_TP-P6	mlb[24B8]
TP24	TP_TP-P6	mlb[24D8]
TP25	TP_TP-P6	mlb[24C8]
TP26	TP_TP-P6	mlb[24C8]
TP27	TP_TP-P6	mlb[24B8]
TP28	TP_TP-P6	mlb[24B8]
TP29	TP_TP-P6	mlb[24B8]
TP30	TP_TP-P6	mlb[24A8]
TP31	TP_TP-P6	mlb[24D8]
TP32	TP_TP-P6	mlb[24B8]
TP33	TP_TP-P6	mlb[24D8]
TP34	TP_TP-P6	mlb[24C8]
TP35	TP_TP-P6	mlb[24D8]
TP36	TP_TP-P6	mlb[24C8]
TP37	TP_TP-P6	mlb[24D8]
TP38	TP_TP-P6	mlb[24B8]
TP39	TP_TP-P6	mlb[24B8]
TP40	TP_TP-P6	mlb[24B8]
TP41	TP_TP-P6	mlb[24D8]
TP42	TP_TP-P6	mlb[24A8]
TP43	TP_TP-P6	mlb[24D8]
TP44	TP_TP-P6	mlb[24B8]
TP45	TP_TP-P6	mlb[24C8]
TP46	TP_TP-P6	mlb[24C8]
TP47	TP_TP-P6	mlb[24C8]
TP48	TP_TP-P6	mlb[24B8]
TP49	TP_TP-P6	mlb[24D8]
TP50	TP_TP-P6	mlb[24D8]
TP51	TP_TP-P6	mlb[24D8]
TP52	TP_TP-P6	mlb[24B8]
TP53	TP_TP-P6	mlb[24C8]
TP54	TP_TP-P6	mlb[24B8]
TP55	TP_TP-P6	mlb[24D8]
TP56	TP_TP-P6	mlb[24B8]
TP57	TP_TP-P6	mlb[24D6]
TP58	TP_TP-P6	mlb[24B6]
TP59	TP_TP-P6	mlb[24B6]
TP60	TP_TP-P6	mlb[24B6]
TP61	TP_TP-P6	mlb[24D6]
TP62	TP_TP-P6	mlb[24D6]
TP63	TP_TP-P6	mlb[24A6]
TP64	TP_TP-P6	mlb[24D6]
TP65	TP_TP-P6	mlb[24D6]
TP66	TP_TP-P6	mlb[24C6]
TP67	TP_TP-P6	mlb[24B6]
TP68	TP_TP-P6	mlb[24B6]
TP69	TP_TP-P6	mlb[24D6]
TP70	TP_TP-P6	mlb[24C6]
TP71	TP_TP-P6	mlb[24A6]
TP72	TP_TP-P6	mlb[24C6]
TP73	TP_TP-P6	mlb[24C6]
TP74	TP_TP-P6	mlb[24C6]
TP75	TP_TP-P6	mlb[24C6]
TP76	TP_TP-P6	mlb[24B6]
TP77	TP_TP-P6	mlb[24B6]
TP78	TP_TP-P6	mlb[24C6]
TP79	TP_TP-P6	mlb[24D6]
TP80	TP_TP-P6	mlb[24C6]
TP81	TP_TP-P6	mlb[24B6]
TP82	TP_TP-P6	mlb[24B6]
TP83	TP_TP-P6	mlb[24B6]
TP84	TP_TP-P6	mlb[24D6]
TP85	TP_TP-P6	mlb[24B6]
TP86	TP_TP-P6	mlb[24A6]
TP87	TP_TP-P6	mlb[24D6]
TP88	TP_TP-P6	mlb[24D6]
TP89	TP_TP-P6	mlb[24C6]
TP90	TP_TP-P6	XW105 mlb[24B8] SHORT_SM mlb[21D2]
TP91	TP_TP-P6	mlb[24C5]
TP92	TP_TP-P6	mlb[24B5]
TP93	TP_TP-P6	mlb[24B5]
TP94	TP_TP-P6	mlb[24B5]
TP95	TP_TP-P6	mlb[24B5]
TP96	TP_TP-P6	mlb[24A5]
TP97	TP_TP-P6	mlb[24C5]
TP98	TP_TP-P6	mlb[24D5]
TP99	TP_TP-P6	mlb[24C5]
TP100	TP_TP-P6	mlb[24D5]
TP101	TP_TP-P6	mlb[24D5]
TP102	TP_TP-P6	mlb[24B5]
TP103	TP_TP-P6	mlb[24B5]
TP104	TP_TP-P6	mlb[24C5]
TP105	TP_TP-5016-SM	mlb[8C1]
TP106	TP_TP-5016-SM	mlb[8C1]
TP107	TP_TP-5016-SM	mlb[8C1]
TP108	TP_TP-P6	mlb[25B6]
TP109	TP_TP-5016-SM	mlb[9C1]
TP110	TP_TP-5016-SM	mlb[9C1]
TP111	TP_SM-TP25-TOP	mlb[26B3]
TP112	TP_SM-TP25-TOP	mlb[26B3]
TP113	TP_SM-TP25-TOP	mlb[26C3]
TP114	TP_SM-TP25-TOP	mlb[26B1]
TP115	TP_TP-5016-SM	mlb[17A8]
TP116	TP_TP-P6	mlb[15B6]
TP117	TP_TP-P6	mlb[3B2]
TP118	TP_TP-P6	mlb[10B8]
TP119	TP_TP-5016-SM	mlb[22C7]
TP120	TP_TP-5016-SM	mlb[22D7]
TP121	TP_TP-P6	mlb[18B1]
TP122	TP_TP-P6	mlb[18A1]
TP123	TP_TP-P6	mlb[18A1]
TP124	TP_TP-5016-SM	mlb[17A8]
TP125	TP_TP-P6	mlb[4D7]
TP126	TP_TP-P6	mlb[5B2]
TP128	TP_TP-P6	mlb[10C7]
TP129	TP_TP-P6	mlb[10C7]
TP131	TP_TP-P6	mlb[11A4]
TP132	TP_TP-P6	mlb[13D8]
TP133	TP_TP-P6	mlb[13D6]
TP134	TP_TP-P6	mlb[5D1]
U1	LM2512_UFBGA	mlb[5B4]
U1_1	MAX8512_SC70-5	usbbridge[31C5]mlb[14]
U1_2	MAX8512_SC70-5	usbbridge[32C5]mlb[14]
U1_3	MAX8512_SC70-5	usbbridge[33C5]mlb[14]
U1_4	MAX8512_SC70-5	usbbridge[34C5]mlb[14]
U1_5	MAX8512_SC70-5	usbbridge[35C5]mlb[14]
U1_6	MAX8512_SC70-5	usbbridge[36C5]mlb[22]
U1_7	MAX8512_SC70-5	usbbridge[37C5]mlb[22]
U1_CL	LTC4066_QFN	chgr[30B3]mlb[9]
U1_CS	SWREG_LT3493_DFN	charger[28C6]mlb[9]
U2	74LVC2G34_SOT891	mlb[2A3 2A3]
U2_1	FT232RL_SSOP	usbbridge[31C4]mlb[14]
U2_2	FT232RL_SSOP	usbbridge[32C4]mlb[14]
U2_3	FT232RL_SSOP	usbbridge[33C4]mlb[14]
U2_4	FT232RL_SSOP	usbbridge[34C4]mlb[14]
U2_5	FT232RL_SSOP	usbbridge[35C4]mlb[14]
U2_6	FT232RL_SSOP	usbbridge[36C4]mlb[22]
U2_7	FT232RL_SSOP	usbbridge[37C4]mlb[22]
U3	MAX3232_SO-LF	mlb[14C7]
U4	MARIO_QFN	mlb[15D4]
U5	MAX8860_UMAX	mlb[24A5]
U6	SN74LVC2T45_WCSP	mlb[24C4]
U7	WM8758_QFN	mlb[7C6]
U8	LIS302DL_LGA	mlb[20B3]
U9	SN74LVC2T45_WCSP	mlb[24D4]
U9_CL	SWREG_LT3493_DFN	chgr[30D4]mlb[9]
U10	74LVC2G66_BGA	mlb[20C6 20D6]
U11	OM3805_HUQFN	mlb[10C5]
U12	LAN91C111_TQFP	mlb[23D5]
U13	FEPR_SST39LF800A_XFLGA	mlb[3D2]
U14	MAX8860_UMAX	mlb[23A4]
U15	MAX3232_SO-LF	mlb[25B4]
U16	SN74AUP1T97_WCSP	mlb[5C7]
U17	FLASH_1MX8_16BGA_XFBGA	mlb[5D7]
U18	SN74AUP1T97_WCSP	mlb[5C6]
U19	OPAMP_MAX4233_UCSP_UCSP	mlb[26B2 26C6]
U20	S5L8900X01_MOBILE_BGA	mlb[2D5]
U20	S5L8900X01_MOBILE_BGA	mlb[3D4]
U20	S5L8900X01_MOBILE_BGA	mlb[4D4 4D6]
U20	S5L8900X01_MOBILE_BGA	mlb[5B6]
U20	S5L8900X01_MOBILE_BGA	mlb[6C4]
U21	SN74AUP1T97_WCSP	mlb[5D5]
U22_CL	MAX4845_DFN6	chgr[30C6]mlb[9]
U23	ISL59121_WLCSP9	mlb[6C6]
U24	74LVC2G34_SOT891	mlb[13D7 13C7]
U25	SN74LVC1G99_BGA	mlb[13C7]
U26	74LVC2G08_SOT833	mlb[3A4 3A4]
U27	SUPPR_NUP412VP5_SOT93	mlb[13A3]
U28	MAX8512_SC70-5	mlb[14D8]
U29	74LVC2G34_SOT891	mlb[14C6 14D6]
U30	ZEPHYR2_BGA81_FBGA1	mlb[15D7]
U31	TPS61045_QFN	mlb[15A7]
U32	MAX8512_SC70-5	mlb[21B2]
U33	SN74LVC2T45_WCSP	mlb[24B4]
U34	SN74LVC2T45_WCSP	mlb[24B4]
U35	SN74LVC1G99_BGA	mlb[11D7]
U36	SN74LVC1G99_BGA	mlb[11C7]
U37	SN74LVC2T45_WCSP	mlb[24B2]
U38	SN74LVC2T45_WCSP	mlb[24C2]
U39	SN74LVC2T45_WCSP	mlb[24B2]
U40	SN74LVC2T45_WCSP	mlb[24D2]
U41	WM8991_BGA	mlb[8C6]
U42	74LVC2G04_SOT891	mlb[11A5 11A5]
U43	TSL2561_CS	mlb[26A7]
U44	SN74LVC1G99_BGA	mlb[18C4]
U45	SN74LVC1G99_BGA	mlb[18D4]
U46	SN74LVC1G99_BGA	mlb[5D5]
U47	LT3460_SC70	mlb[16A6]
U48	LREG_XC6401_USP_USP-6B	mlb[8D6]
U49	SN74AUP1T97_WCSP	mlb[17D4]
U50	SN74AUP1T97_WCSP	mlb[17D4]
U51	SN74AUP1T97_WCSP	mlb[17C4]
U52	74LVC1G86_SOT891	mlb[11B5]
U53	74LVC2G04_SOT891	mlb[11A7 11A7]
U54	SN74LVC1G99_BGA	mlb[17C4]
U55	74LVC2G08_SOT833	mlb[15B4 15B3]
U57	SN74LVC2T45_WCSP	mlb[17C2]
U58	LTC4088EDE1_DFN14	charger[28B4]mlb[9]
U59	ISL29003_ODFN	mlb[26B7]
U60	OPAMP_MAX4233_UCSP_UCSP	mlb[12D8]
U61	SN74LVC1G99_BGA	mlb[2B7]
U62	SN74LVC1G99_BGA	mlb[2B7]
U63	LM2512_UFBGA	mlb[5D3]
U77_CS	MAX4845_DFN6	charger[28D5]mlb[9]
U6001	74LVC1G14GF_SOT891	mlb[16B6]
U6022	EEPROM_AT25256AN_SOI	mlb[16B3]
VR1	VREG_LP3986_BGA	mlb[11B2]
VR2	VREG_MIC29502_TO-263	mlb[19C3]
XW1	SHORT_SM	mlb[2D7]
XW1_CL	SHORT_SM	chgr[30D2]mlb[9]
XW2	SHORT_SM	mlb[2D7]
XW2_CL	SHORT_SM	chgr[30D2]mlb[9]
XW3	SHORT_SM	mlb[2D7]
XW4	SHORT_SM	mlb[2D7]
XW5	SHORT_SM	mlb[2D6]
XW6	SHORT_SM	mlb[2D6]
XW7	SHORT_SM	mlb[2D2]
XW8	SHORT_SM	mlb[2D2]
XW9	SHORT_SM	mlb[2D2]
XW10	SHORT_SM	mlb[2B1]
XW11	SHORT_SM	mlb[2B1]
XW12	SHORT_SM	mlb[2B1]
XW13	SHORT_SM	mlb[2D1]
XW14	SHORT_SM	mlb[10A7]
XW15	SHORT_SM	mlb[4A6]
XW16	SHORT_SM	mlb[4A6]
XW17	SHORT_SM	mlb[4D5]
XW18	SHORT_SM	mlb[4D5]
XW19	SHORT_SM	mlb[4D2]
XW20	SHORT_SM	mlb[4D2]
XW21	SHORT_SM	mlb[4B2]
XW22	SHORT_SM	mlb[4A2]
XW23	SHORT_SM	mlb[4D1]
XW24	SHORT_SM	mlb[4C1]
XW25	SHORT_SM	mlb[4C1]
XW26	SHORT_SM	mlb[4C1]
XW27	SHORT_SM	mlb[4D1]
XW28	SHORT_SM	mlb[4B1]
XW29	SHORT_SM	mlb[4B1]
XW30	SHORT_SM	mlb[4D1]
XW31	SHORT_SM	mlb[5C7]
XW32	SHORT_SM	mlb[5C7]
XW33	SHORT_SM	mlb[5C5]
XW34	SHORT_SM	mlb[5C5]
XW35	SHORT_SM	mlb[5C4]
XW36	SHORT_SM	mlb[5C4]
XW37	SHORT_SM	mlb[5C3]
XW38	SHORT_SM	mlb[5C3]
XW39	SHORT_SM	mlb[5C2]
XW40	SHORT_SM	mlb[5C2]
XW41	SHORT_SM	mlb[6D7]
XW42	SHORT_SM	mlb[6D7]
XW43	SHORT_SM	mlb[6D7]
XW44	SHORT_SM	mlb[10C4]
XW45	SHORT_SM	mlb[10C2]
XW46	SHORT_SM	mlb[6C7]
XW47	SHORT_SM	mlb[6D6]
XW48	SHORT_SM	mlb[6D5]
XW49	SHORT_SM	mlb[6D3]
XW50	SHORT_SM	mlb[6D3]
XW51	SHORT6L25_WITH_ALTS_SM	mlb[7B4]
XW52	SHORT6L25_WITH_ALTS_SM	mlb[7B4]
XW53	SHORT_SM	mlb[10C3]
XW54	SHORT_SM	mlb[10D2]
XW55	SHORT_SM	mlb[10B1]
XW56	SHORT_SM	mlb[10B1]
XW57	SHORT_SM	mlb[10C1]
XW58	SHORT_SM	mlb[10C1]
XW59	SHORT_SM	mlb[10B1]
XW60	SHORT_SM	mlb[10B1]
XW61	SHORT_SM	mlb[12B5]
XW62	SHORT_SM	mlb[12B4]
XW63	SHORT_SM	mlb[15A7]
XW64	SHORT_SM	mlb[15A6]
XW65	SHORT_SHORT-0201-NSM	mlb[15D6]
XW66	SHORT_SHORT-0201-NSM	mlb[15D3]
XW67	SHORT_SM	mlb[19D4]
XW68	SHORT_SM	mlb[19D4]
XW69	SHORT_SM	mlb[20C4]
XW70	SHORT_SM	mlb[20C4]
XW71	SHORT_SM	mlb[20C3]
XW72	SHORT_SM	mlb[20C2]
XW73	SHORT_SM	mlb[20D1]
XW74	SHORT_SM	mlb[20D1]
XW75	SHORT_SM	mlb[3D7]
XW76	SHORT_SM	mlb[3D7]
XW77	SHORT_SM	mlb[3D2]
XW78	SHORT_SM	mlb[3D1]
XW79	SHORT_SM	mlb[8A5]
XW80	SHORT_SM	mlb[8A5]
XW81	SHORT_SM	mlb[8A5]
XW82	SHORT_SM	mlb[8A5]
XW83	SHORT_SM	mlb[8A5]
XW84	SHORT_SM	mlb[8A5]
XW85	SHORT_SM	mlb[11B2]
XW86	SHORT_SM	mlb[11B1]
XW87	SHORT_SM	mlb[11B1]
XW88	SHORT_SM	mlb[11B1]
XW89	SHORT_SM	mlb[26C4]
XW90	SHORT_SM	mlb[26C3]
XW91	SHORT_SM	mlb[17A3]
XW92	SHORT_SM	mlb[17A3]
XW93	SHORT_SM	mlb[18C7]
XW94	SHORT_SM	mlb[18C7]
XW95	SHORT_SM	mlb[10A6]
XW98	SHORT_SM	mlb[9A3]
XW99	SHORT_SM	mlb[9A3]
XW100	SHORT_SM	mlb[21D2]
XW101	SHORT_SM	mlb[21D2]
XW102	SHORT_SM	mlb[21D2]
XW103	SHORT_SM	mlb[21D2]
XW104	SHORT_SM	mlb[21D2]
XW106	SHORT_SM	mlb[21D2]
XW107	SHORT_SM	mlb[21D2]
XW108	SHORT_SM	mlb[21D2]
XW109	SHORT_SM	mlb[21C2]
XW110	SHORT_SM	mlb[21C2]
XW111	SHORT_SM	mlb[21C2]
XW112	SHORT_SM	mlb[21C2]
Y1	CRYSTAL_3.2X1.5X.6-SM	mlb[10A5]
Y1_1	CRYSTAL_4PIN_SM-2	usbbridge[31B4]mlb[14]
Y1_2	CRYSTAL_4PIN_SM-2	usbbridge[32B4]mlb[14]
Y1_3	CRYSTAL_4PIN_SM-2	usbbridge[33B4]mlb[14]
Y1_4	CRYSTAL_4PIN_SM-2	usbbridge[34B4]mlb[14]
Y1_5	CRYSTAL_4PIN_SM-2	usbbridge[35B4]mlb[14]
Y1_6	CRYSTAL_4PIN_SM-2	usbbridge[36B4]mlb[22]
Y1_7	CRYSTAL_4PIN_SM-2	usbbridge[37B4]mlb[22]
Y2	CRYSTAL_4PIN_SM-2	mlb[2A6]
Y3	CRYSTAL_4PIN_SM-2	mlb[6A4]
Y4	CRYSTAL_SM	mlb[23A4]
ZT4	MTGHOLE	mlb[19D1]
ZT5	MTGHOLE	mlb[19D1]
ZT6	MTGHOLE	mlb[19C1]